The Wireless World

THE PRACTICAL RADIO JOURNAL

27th Year of Publication

No. 958. THURSDAY, JANUARY 6TH, 1938. VOL. XLII. No. 1.

Proprietors: ILIFFE & SONS LTD.

Editor:
HUGH S. POCOCK.

Editorial,
Advertising and Publishing Offices:
DORSET HOUSE, STAMFORD STREET,
LONDON, S.E.1.

Telephone: Waterloo 3333 (50 lines).
Telegrams: "Ethaworld, Sedist, London."

COVENTRY: Hertford Street.
Telegrams: "Autocar, Coventry." Telephone: 5210 Coventry.

BIRMINGHAM:
Guildhall Buildings, Navigation Street, 2.
Telegrams: "Autopress, Birmingham." Telephone: 2971 Midland (4 lines).

MANCHESTER: 260, Deansgate, 3.
Telegrams: "Iliffe, Manchester." Telephone: Blackfriars 4412 (4 lines).

GLASGOW: 26B, Renfield Street, C.2.
Telegrams: "Iliffe, Glasgow." Telephone: Central 4857.

PUBLISHED WEEKLY. ENTERED AS SECOND CLASS MATTER AT NEW YORK, N.Y.

Subscription Rates:
Home, £1 1s. 8d.; Canada, £1 1s. 8d.; other countries, £1 3s. 10d. per annum.

As many of the circuits and apparatus described in these pages are covered by patents, readers are advised, before making use of them, to satisfy themselves that they would not be infringing patents.

CONTENTS

	Page
Editorial Comment	1
How to Design a Receiver	2
On the Short Waves	5
Tuning Drift	6
New Apparatus Reviewed	9
Principal Broadcasting Stations	10
Tone Control Unit	12
Readers' Problems	15
News of the Week	16
Random Radiations	18
Letters to the Editor	20
Recent Inventions	22

EDITORIAL COMMENT

£200,000 Experiment

The Post Office "Try On"

SOME information as to Post Office intentions with regard to relay broadcasting services was disclosed by the Assistant Postmaster-General the other day, when he announced in the House of Commons that a public experimental wire broadcasting service would be introduced in Southampton in 1938. It was stated that it was a part of the work with which the Post Office was charged in accordance with the recommendations of the Committee on Broadcasting in 1935.

In addition to the main public service distributed by means of a special wire, a limited experiment would be made in the distribution of broadcast programmes over the telephone wires, and subscribers would have a choice of several programmes, the selection of which was being arranged in consultation with the B.B.C. The charge for the service would be 1/6 a week, plus a small initial payment. The total capital cost of this experiment was estimated at about £200,000.

Government Competition

So much, then, for this statement of the immediate activities in the direction of developing the relay services as disclosed by the Post Office, but we are still waiting to hear why it is necessary for this work and heavy expenditure to be undertaken and what is the justification for the Post Office running a relay service which cannot but be directly competitive with the efforts of the radio industry to encourage reception of broadcasting by means of the wireless receivers which they manufacture.

At a time when the B.B.C. is clamouring for additional funds, both for sound broadcasting and for the development of television, and when the radio industry which employs tens of thousands of people is by no means enjoying a period of prosperity, it seems to us that some extraordinarily good reasons should be disclosed to justify the Post Office in indulging in this £200,000 experiment.

Was It Intended?

We should like to feel ourselves satisfied that the Ullswater Committee, when they recommended that the technical side of the relay services should be handed over to the Post Office, really meant their statement to be interpreted as a direct recommendation that the Post Office should get active and develop an alternative method of broadcast reception by the relay services on a national scale.

We feel strongly that, without extraordinarily good reasons so far undisclosed for such enterprise, it cannot be the policy of the Government to encourage heavy expenditure on a public service in duplication of one already available, especially if that enterprise must, of necessity, come into direct competition with an existing industry. If, as we have suggested previously, the Post Office development of the relay services is connected with national defence, then surely there can be no harm in a public statement to that effect backed by sufficiently strong arguments to overwhelm opposition. If the reasons are not good and the whole business is in the nature of a national defence "stampede" then a proper investigation should precede any commitment.

How a Receiver is Designed.—I

AS the first example in this series of articles on receiver design, a two-valve set has been selected. It is arranged for AC/DC operation, and in spite of a simple tuning system quite good selectivity is secured. This tuning system will be discussed next week. In this article the output stage is treated, and it is shown how high quality reproduction of strong signals can be combined with high sensitivity for weak ones.

The Output Stage of a Two-valve Local Station Set

IT was explained in last week's issue of *The Wireless World* that the purpose of this series of articles is to demonstrate both theoretically and practically the principles of receiver design. Moreover, the aim is to do this in such a way that the reader will acquire sufficient knowledge to enable him to design or to modify a set to suit his own particular requirements. The subject does not present serious difficulties if it is tackled in a progressive manner, and for this reason quite a simple type of set has been selected to form the starting point.

Let us suppose that we want a set primarily for use on the local stations, and that the receiver must be of an inexpensive type. Quality will naturally be one of the primary requisites, and both sensitivity and selectivity need be no higher than are necessary to provide good interference-free reception of the local stations. The set should be mains-operated for cheapness, not in first, but running costs.

A two-valve set will probably meet our needs well and one valve will be used in the output stage and the other as the detector. A mains-operated set can be built for AC supplies or DC supplies, or so that it will operate from either. In general, the purely AC type of set is to be preferred because of the ease with which high voltages can be obtained, the complete isolation of the receiver circuits from the mains, and the greater ease of smoothing. With a small set, however, the difference between the two types is less important, and a very good performance can be secured from the AC/DC set; the purely DC set need not be considered, since it is only an AC/DC set minus the rectifier.

Let us consider, then, a two-valve set for AC/DC operation. We shall start, as always, with the output stage and work backwards to the aerial. This is necessary because it is the output stage which provides the power necessary for operating the loud speaker, and it must consequently be chosen so that it can provide this necessary power without introducing distortion. This valve itself requires a considerable magnitude of signal voltage to drive it, and it is the business of the earlier equipment to provide this.

There are two main types of output stage and two main types of valve which we can use in either. An output stage can be either single-ended or push-pull. The latter demands two valves and the former one, so that the use of push-pull is automatically ruled out by the fact that we have only one valve to spare for the output stage. This valve can be either a triode or a pentode (or tetrode), and each has its advantages and disadvantages.

The chief relevant characteristics of these valves are listed in the accompanying table, and the fourth item is especially important in the case of an AC/DC supply. The full output of a valve can only be obtained when the valve has its full rated anode voltage applied to it, and most valves are rated for 250 volts. The HT supply must be equal to the sum of the anode voltage and the grid bias; with a triode this is often 285 volts or more, with a pentode perhaps 260 volts. With a DC mains supply, however, the HT voltage will always be less than the mains voltage, and in an AC/DC set used on AC can be very little higher.

The supply mains vary from 200 volts to 250 volts, and the HT supply will often be 180-230 volts only. With neither type of output valve can it be fully run, but there is much less voltage wasted in obtaining grid bias with a pentode than with a triode, and this, coupled with the greater efficiency of the pentode, is a very big point in its favour. Its advantage of higher sensitivity is also not to be despised in the case of a set with a limited number of valves.

There is no doubt, however, that the triode is superior to the pentode as far as quality is concerned, and we do want high quality. What are we to do? If we are going to use the set very near to the locals so that we shall have no difficulty in obtaining a big detector output a triode will be the better, apart from the difficulty of its high grid bias. If we are farther from the locals we shall have to pick the pentode because of its higher sensitivity.

This looks as though we shall have to design two sets, one with a triode output stage and the other with a pentode. Fortunately, however, there is a way out. We can use a pentode and include negative feed-back. Negative feed-back is a circuit development which enables the apparent output resistance and distortion to be reduced. If we use sufficient negative feed-back we can make a pentode damp the loud speaker as heavily as a triode and we can reduce valve distortion to a similar level. In doing this we sacrifice the sensitivity of the pentode and bring it to equality with the triode in this respect also. We do not, however, lose the efficiency of the pentode, and it still requires its normal low value of grid bias.

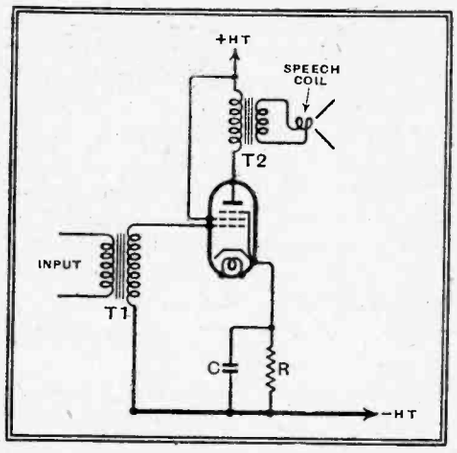

Fig. 1.—The conventional circuit of a pentode output stage is shown here. Grid bias is provided by the resistance R.

The obvious course, therefore, is to use a pentode with negative feed-back and to

How a Receiver is Designed—

make the amount of the feed-back variable. We can then always use as much feed-back as the signal strength will permit and so obtain the best approach to the ideal operating conditions. In order to get both high gain and good detector operation, we shall adopt transformer coupling to the output stage, as will be more fully discussed later, and the circuit of the output stage thus takes the form shown in Fig. 1.

The output transformer T2 is not generally included in the receiver, since it is the general practice to fit it to the loud speaker. It is, however, important, for it acts as the connecting link which transfers the power from the valve circuit to the loud speaker. The valve will only deliver its maximum power output when working into a load circuit of fairly high impedance, usually 4,000-10,000 ohms. The speech coil of the loud speaker generally has an impedance of some 1-15 ohms. The transformer reconciles the discrepancy and makes the low speech-coil impedance appear to the valve as the correct high impedance.

The Output Transformer

The correct turns ratio is needed for this, of course, but this is easily calculated. The makers of the speaker quote a figure for the speech coil impedance and the valve makers quote a figure for the optimum load impedance for their valves (this is also given in *The Wireless World* Valve Data Supplement[1]). Divide the load impedance by the speech-coil impedance and take the square root of the result; the figure obtained is the ratio of primary to secondary turns on the transformer.

In addition to possessing the correct ratio the primary inductance should be high and the leakage inductance low if a good bass and treble response is to be secured. Furthermore, the resistance of the primary should be low, otherwise there will be an excessive voltage drop across it.

Returning to the valve, we have now to select the specimen we are going to use. AC/DC valves are made in two types, with heaters consuming 0.2 ampere or 0.3 ampere. The former is the more economical, so we will select it. It so happens that our choice of output pentode in the AC/DC range is limited, each maker having one or two types only and the valves of different makes being very similar.

Suppose we take the Mazda Pen. 3520. A glance at *The Wireless World* Valve Data Supplement shows that the heater requires 0.2 ampere at 35 volts and that the valve requires 250 volts maximum for anode and screen and −11.8 volts grid bias. The anode and screen currents are 40.0 mA. (milliamps) and 8.0 mA. respectively, and the optimum load impedance is 5,500 ohms, the power output being 3.7 watts.

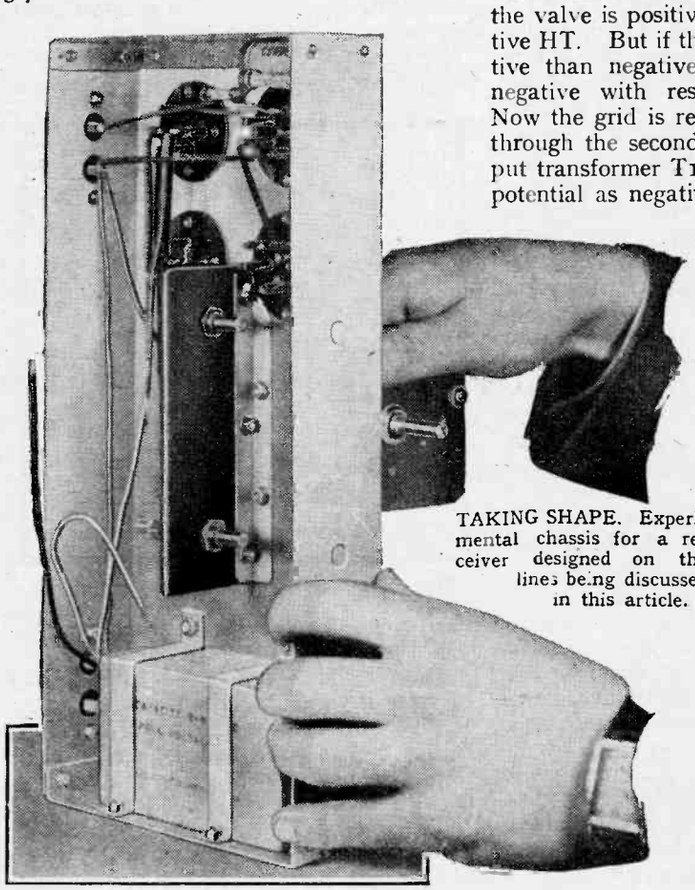

TAKING SHAPE. Experimental chassis for a receiver designed on the lines being discussed in this article.

It should be noted that the anode voltage is the figure between the anode and cathode of the valve and the screen voltage that between the screen grid and cathode. These figures are usually lower than those measured between the electrodes and negative HT.

Referring again to Fig. 1 and assuming that we are going to apply the full rated voltages, we have for an, as yet unspecified, HT supply voltage a current of 40 mA. flowing from the anode of the valve through the transformer primary, the HT supply, and the cathode resistance R to the cathode. Another current of 8 mA. leaves the screen grid and flows through the HT supply and R to cathode. Both these currents flow in the same direction through R, so they are additive, and the total current through this resistance is 48 mA.

There is consequently a voltage drop across this resistance and the cathode of the valve is positive with respect to negative HT. But if the cathode is more positive than negative HT, negative HT is negative with respect to the cathode. Now the grid is returned to negative HT through the secondary winding of the input transformer T1, and it is at the same potential as negative HT, for there is no current flowing in this circuit. Consequently, the grid is negative with respect to the cathode by an amount equal to the voltage drop across R.

This is the way in which we obtain negative grid bias, and we must consequently choose R correctly to give the desired bias. In this case it is 11.8 volts and the current is 48 mA. We shall obtain the value of the resistance in ohms if we divide the voltage by the current (in mA.) and multiply by 1,000. Performing this operation we find R must be 246 ohms. This is not a standard value, and it is consequently pertinent to enquire how accurately we must choose the resistance. Suppose we use rather too high a value. A greater bias voltage will be developed, and this will mean that both anode and screen currents will be below normal. Because the currents are lower, however, the increase in voltage across R will not be proportional to the increase in R. Similarly, if R is too low the bias will also be too low and the currents too high. The increase in current, however, tends to offset the reduction in resistance.

There is thus a species of negative feedback due to the bias resistance, and its value is not particularly critical. Too much or too little bias will naturally reduce the power output, but the normal tolerances of some ±10 per cent. in resistance values are not important. This means that the value of R can be 246±24.6

[1] *The Wireless World*, November 25th, 1937.

TRIODE v. PENTODE—A COMPARISON

CHARACTERISTICS	REMARKS
1. A triode has a much lower AC resistance than a pentode.	This means that the loud speaker is more heavily damped and bass resonances are consequently less prominent.
2. Triode characteristics are straighter than those of a pentode.	This means that a triode introduces less distortion than a pentode.
3. A triode consumes more power from the HT supply than a pentode for the same output power.	This means that a triode is less efficient than a pentode.
4. A triode requires a greater value of grid bias than a pentode.	This means that a higher voltage HT supply is needed with a triode than with a pentode
5. A triode requires a bigger input signal voltage than a pentode.	This means that a triode is less sensitive than a pentode.

How a Receiver is Designed—

ohms without the performance being seriously impaired and we can choose the standard value of 250 ohms. It is worth noting at this point that if we reduce the HT supply voltage so that the anode and screen voltages are below their maximum figures, the total current also falls, and hence the voltage drop across R. This means that the bias voltage is automatically reduced to suit the new anode and screen voltages. The compensation is not quite perfect, but quite near enough for all practical purposes provided that the change in voltage is not too great. This means that we can safely use the value of R calculated for the maximum voltage, for which as a rule we alone have figures, at considerably lower voltages.

Knowing the value of R, the only other thing we want to know about it is the power dissipated in it so that we can choose a component of suitable rating. The power in watts is equal to the voltage across the resistance multiplied by the current through it (mA.) divided by 1,000. In this case we have 11.8 volts and 48 mA., so the power is 0.566 watt. A 0.5-watt resistance would be overloaded, so we choose the next higher rating, 1 watt.

For the maximum voltage on the valves, the HT supply must be equal to the sum of the screen and anode voltages, or 261.8 volts. Even then the anode voltage will be below 250 volts on account of the drop in the resistance of the output transformer primary. A good component may have a resistance of 300 ohms and the current is 40 mA., so that the voltage drop is 12 volts. The true anode voltage thus will be about 238 volts only.

Fortunately, this does not upset matters to any great extent, for the anode voltage of a pentode has very little effect on the anode current. The screen voltage, however, has a big effect on both anode and screen currents.

Actually, of course, our HT supply will not approach 261.8 volts, so that the current consumption of the output stage will be less than 48 mA. and the power output less than the 3.5 watts obtainable at the full voltage. The actual voltages will depend on the design of the mains equipment and upon the mains voltage.

The Grid Bias Circuit

The next thing to tackle is the condenser C. We have seen that the bias resistance acts in such a way as to oppose any change of anode current. The signal voltage on the grid makes the anode current vary rapidly in sympathy with it, and the greater the magnitude of these anode current variations the greater the output of the valve. The bias resistance by tending to oppose the changes in anode current prevents the full output from being secured, or more accurately makes it necessary to apply a larger signal in order to obtain the normal output.

In order to prevent this we by-pass R by the condenser C, which largely acts as a short-circuit to alternating currents such as those produced by the signal. We want to know two things about C—its capacity and its voltage rating. Actually, we already know the latter, for it must be greater than the voltage drop across R—11.8 volts. The nearest standard rating is 12 volts, and we shall be safe in using this because we know that under the reduced voltage conditions we shall have to adopt the voltage will not reach even 11.8 volts.

The capacity required depends on the value of R, and the reactance of the condenser at the lowest frequency required must be low compared with the resistance of R. The exact value is by no means critical, but taking 50 c/s as the lowest frequency a good arbitrary rule for evaluating the capacity is to divide 12,000 by the value of R; this gives capacity in microfarads (μF). Applying this we find C=48 μF., and the nearest standard capacity is 50 μF. Naturally, a capacity of this size means an electrolytic condenser, and as the cathode is positive with respect to negative HT, the positive terminal is taken to cathode.

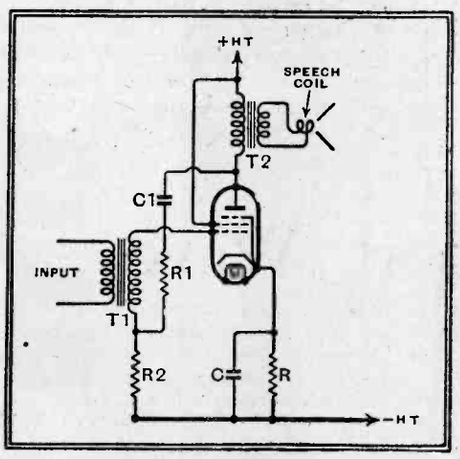

Fig. 2.—Quality of reproduction can be improved by using negative feed-back and this is provided by C1, R1 and R2. Otherwise the circuit is the same as that of Fig. 1.

The method of coupling the detector and output valves will naturally be by a transformer, since we need all the gain we can get, and a transformer coupling enables us to obtain considerably higher amplification than is possible with resistance coupling. The suitability of transformer coupling from the point of view of reproduction depends largely upon the quality of the transformer, and it can be very nearly the equal of resistance coupling.

Turning now to the question of negative feed-back, the input signal in Fig. 1 is developed across the input transformer primary and applied, through C, between grid and cathode of the valve. As the input impedance of a valve is very high, we are dealing substantially with voltage, for the secondary current is negligibly small. The signal moves the grid potential alternately positive and negative about the bias voltage, but it is, of course, always negative with respect to the cathode. When the grid voltage changes in a positive direction, that is, becomes less negative, the anode current rises and there is an increased voltage drop across the load impedance of the valve.

Negative Feed-Back

We are dealing here with rapidly changing currents, so that this load impedance is not the DC resistance of the primary of T2, but the speech coil impedance multiplied by the square of the transformer ratio. Relative to its previous value, the anode voltage thus swings negatively. When the grid potential moves negatively, everything is reversed, of course, and the anode becomes more positive.

Now, if we take a portion of this anode voltage and inject it into the grid circuit in series with the signal, as in Fig. 2, it is easy to see that it will oppose the signal. This will make it necessary to apply a larger signal to get the same output. At first sight, this does not seem very desirable, and the reduction in gain is certainly an unwanted effect. There are advantages to be gained from feed-back, however.

If there is a bass resonance in a loud speaker, the cone will continue to vibrate after the signal voltage has ceased. The movement of the coil in the magnetic field causes a voltage to appear in the coil, and this is applied to the anode of the valve through the transformer T2. If the valve is of low resistance, it absorbs power from the speech coil and rapidly stops it from vibrating; in other words, it damps the loud speaker. If the valve has a high resistance, however, little power is absorbed and the cone can continue vibrating much longer.

A pentode normally has a very high resistance and leaves the loud speaker substantially undamped. When negative feed-back is properly applied, however, the grid potential changes in the same direction as the anode potential when a voltage is applied to the anode, and the change of anode current is consequently much greater than it would be if the voltage were applied to the anode only. This is equivalent to lowering the effective resistance of the valve, and by applying sufficient feed-back the resistance can be made as low as we want.

There is a second effect, however, which is that normally feed-back reduces the amplitudes of harmonics of the signal introduced by the valve more than it reduces the signal. Such harmonic introduction is usually called amplitude distortion, and it is audibly the worst type of distortion a receiver can introduce, for the ear is far less tolerant of it than it is of the uneven amplification of different musical frequencies which we usually term frequency distortion.

Generally speaking, the effect of negative feed-back is to modify the characteristics of a pentode so that they become more like those of a triode. With a high degree of feed-back, the output stage has all the characteristics of a triode and will give high quality with heavy loud speaker damping, but has low sensitivity.

By means of a variable resistance, the amount of feed-back can be controlled at

How a Receiver is Designed—

will, and we can consequently have in the one receiver the equivalent of a triode or pentode valve, or any step between them.

Referring to Fig. 2, it only remains to calculate values for the feed-back network. The ratio of R1/R2 depends on the amount of feed-back required; we are never likely to require more than about 20 per cent. feed-back, and 10 per cent. is a more usual figure. As R2 will be variable, it is sufficient to make its maximum value about one-fifth of that of R1.

Now when R2 is at zero for no feed-back, R1 is effectively in shunt with the output, and it must consequently be large compared with the optimum load impedance. If it is not, it will absorb appreciable power. The loss is negligible if R1 is about ten times the optimum load. As this figure is 5,500 ohms in this case, R1 should be about 55,000 ohms. Its value is in no way critical, however, and the nearest standard value of 50,000 ohms is quite suitable. This makes R2 10,000 ohms, also a standard value. Quite a wide latitude is possible in these values, and it would be quite satisfactory to make R1 100,000 ohms if R2 is changed to 20,000 ohms at the same time. Higher values than 100,000 ohms for R1 are inadvisable, however, on account of stray circuit capacities at high frequencies.

There remains C1. The reactance of this must be low compared with R1 at the lowest frequency required. A reactance of 5,000 ohms at 50 c/s means a capacity of 0.636 μF. The nearest standard value is 0.5 μF. and this is quite satisfactory, for the only effect of a small condenser is to reduce the feed-back at low frequencies and so increase the gain. The result is a tendency towards a rising bass characteristic, which is no bad thing. The value of C1 should be inversely proportional to R1, and if R1 is 100,000 ohms, C1 need be no greater than 0.25 μF. The use of a larger capacity for this condenser is in no way detrimental. The condenser must, of course, be rated for working at the sum of the anode and bias voltages. In this case 250 volts is sufficient.

On the Short Waves

THERE seems little doubt that the problem of running sensitive AC all-wave receivers from DC mains has been solved, since during the past few days I have been running my H.M.V.650 from an Electro Dynamic rotary converter and obtaining results certainly not inferior to those previously obtained on AC mains.

After the noise produced by my unsilenced machine it is hard to believe that the receiver is now running from a converter, the performance being particularly good on the three short-wave ranges covering 5 to 110 metres. At the bottom of the medium-wave band the noise is just noticeable on Radio Normandie, but completely negligible on London National, it being remembered that the receiver in question has a very good top response. On the rest of the medium band and on the long-wave range the noise produced by the converter is again negligible.

Since the new converter is being used for the all-wave receiver, the larger and older model was turned over to the television receiver, and some experiments in silencing it electrically were conducted.

First, 0.01 mfd. condensers were connected from each of the four brush-holders (2-DC and 2-AC) to the frame and four short-wave chokes, to carry 1.5 amps, inserted in each of the two ingoing DC leads and the two outgoing AC leads. Across the set side of the two (AC) HF chokes a 0.003 mfd. condenser was connected, the lead then passed through the original smoothing circuits provided and terminating in the output socket. A similar circuit arrangement was also adopted on the DC side.

After these modifications had been completed the old converter was compared with the Electro Dynamic, and it was found that there was now little difference between the two below 100 metres, but on the medium and long waves the Electro Dynamic scored easily.

The modified converter has also been found to work very well with the television set, provided an earthed screened feeder is used for the vision portion of the receiver. On the sound side an ordinary inverted "L" is used, giving much stronger signals without noticeable noise, but when this aerial is used for the vision section—it is completely unscreened—the interference picked up causes a vivid snowstorm effect. At the moment the best results on the vision side are obtained when the two wires comprising the screened pair are twisted together and joined to the grid of the vision RF valve directly.

The next step here is obviously to inspect the connections from the dipole, and if these are intact then an inverted "V" aerial for receiving Alexandra Palace seems indicated.

Incidentally, the tests with the television set were livened considerably by a couple of faults in the time-base unit. First, after running a little while the frame "thyratron" ceased to function (a hard valve circuit of my own design is used for the line direction, using an AC/P valve and a small transformer). It was noted that an excessive voltage drop (by comparison with the line section) was occurring across a 2-watt 250,000-ohm resistance in the T31 anode circuit. This resistance in the course of a few minutes had increased from 250,000 ohms to over 10 megohms!

Upon reconnecting up the tube and switching on again it was noticed that the picture was permanently deflected towards the bottom of the tube and could not be moved by adjustment of the frame shift bias, although the line shift was still behaving normally. A voltmeter test showed that the shift bias circuit was correct. A moment's thought showed that a leaky coupling condenser would produce a considerable positive bias (required to move picture to bottom of tube) across the 1-megohm safety resistance connecting the deflector plate to the slider on the shift potentiometer.

The suspected 0.1 mfd. 1,000-volt condenser was changed and the permanent shift removed.

To leave television now and return to the short waves, one is pleased to record world-wide successful reception of the King's Message on Christmas Day. All six transmitters at Daventry were used on the following frequencies: GST, 21.55 Mc/s; GSJ, 21.53 Mc/s; GSH, 21.47 Mc/s, all in the 13m. band; GSG, 17.79 Mc/s, in the 17m. band; GSD, 11.75 Mc/s and GSB, 9.51 Mc/s, in the 25 and 31m. bands. Many of the Post Office point-to-point telephone transmitters were also used from Rugby to Nairobi, Cape Town, etc.

The B.B.C. 13m. transmitter did particularly well in S. America, the West Indies and Africa; GSG, on 17 metres, was best in Canada; GSD, on 25 metres, in India, Australia and Hong Kong; and GSB in New Zealand.

Conditions improved noticeably on Christmas Eve, and were quite good on Christmas Day, rising to a peak on Boxing Day, when the U.S. 28 Mc/s amateurs were good between 3 and 5 p.m.

Recently there has been a change to lower ionisation levels, and, consequently, to the lower frequencies, especially late at night.

This drift, however, has not been without its compensations, and during the last days of the old year one has had the pleasure of listening to VP3MR, Georgetown, British Guiana, nightly around 11 p.m. at quite good entertainment value, marred only by persistent heterodynes.

VP3MR operates on 6.07 Mc/s, and is, perhaps, the strongest distant signal in the band. The technical quality of the outside broadcast of dance music is excellent, and it is pleasing to find one S. American with an English announcer and no gramophone records.

Finally, one has to record an improved signal from W8XK in the 15 Mc/s band, and to report that W2XAF/D hope to have their 100 kw. set on the air in February.

ETHACOMBER.

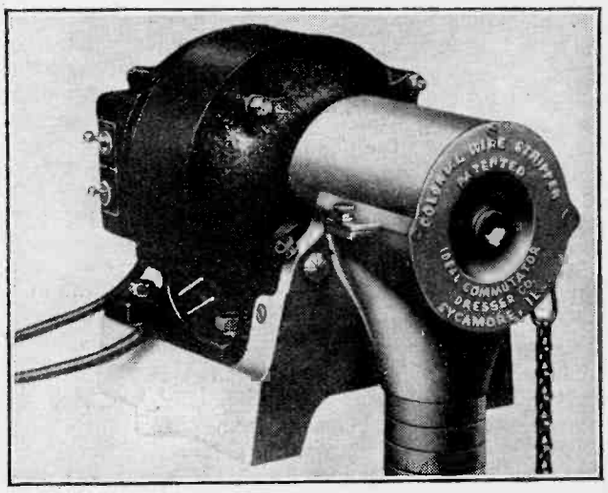

CENTRIFUGAL WIRE STRIPPER.—Those who have laboriously bared the ends of a large number of connecting wires by hand will covet this American stripping machine, which deals with almost any kind of wire, whether solid or stranded and with either right- or left-hand twist. The rotary cutters may be set to accommodate themselves to various wire diameters.

Tuning Drift

A METHOD OF IMPROVING OSCILLATOR STABILITY

By E. L. GARDINER, B.Sc.

MOST users of selective superheterodyne receivers will have experienced trouble at one time or another from a gradual drift which prevents any particular station from remaining in exact tune over long periods. This defect can be due to a variety of causes, which include changes in the actual frequency of the station received or a gradual change in the IF amplifier adjustments caused by the varying capacity of mica trimmers with temperature. Generally, however, it is the oscillator section of the frequency changer which is responsible. The effect is likely to be most marked directly after switching on, while the valve and its associated circuits are warming up. A gradual rise in temperature will result in a corresponding change in oscillator frequency. This can be minimised by careful design, but it is invariably present to some extent, and may be serious or not according to circumstances. It will be interesting to consider what these circumstances are likely to be.

Suppose the oscillator drifts in frequency to the not uncommon extent of 0.2 per cent. in the first quarter of an hour after switching on. At an average broadcast frequency of 1,000 kc/s, 300 metres wavelength, this will represent a detuning of 2 kc/s. Whether or not this will be noticeable to the ear depends upon the selectivity of the IF amplifier which follows the frequency changer. Should this be of the band-pass variety, having an acceptance of, perhaps, five kilocycles or more, then a change in carrier frequency of 2 kc/s from the centre of the band-pass curve will not be very noticeable, although it will make the response to the two sidebands unsymmetrical and thus affect quality somewhat. The narrower the band-width in use, the more serious this effect becomes. Many modern receivers, however, do not actually employ a band-pass IF characteristic, but use a sharply peaked curve followed by a generally rising audio-frequency response to keep up the higher musical frequencies; in other cases all the IF couplings are tuned to produce a single peaked resonance curve of rather blunt shape.

A peaked resonance curve is likely to fall appreciably at 2 kc/s from resonance, and the effect of detuning by this amount may be very noticeable to the ear. When a sharply peaked curve is intentionally used to provide high effective selectivity, or, in a "communications" type receiver containing a crystal filter, a drift of considerably less than 2 kc/s would be most serious, and would necessitate frequent retuning. To overcome this difficulty automatic tuning control has been advised, in which the oscillator frequency is automatically varied to keep the signal always close to IF resonance.

The second factor which makes oscillator drift noticeable is the use of a moderately selective IF amplifier at high signal frequencies. Consider a short-wave signal, such as the television sound programmes on about 40 Mc/s. Here 0.2 per cent. change in oscillator frequency will mean about 80 kc/s off tune! If the same IF amplifier be used as for the longer wavebands, then the signals will drift completely out of tune in a few minutes. In practice it is, of course, usual to broaden the IF selectivity, but stability of the oscillator becomes increasingly important as wavelength is reduced.

That frequency drift is noticeable in many modern commercial receivers is well illustrated by a particular set which the writer has in use. This is a 1937 five-valve all-wave superheterodyne by one of the best-known makers. It is a comparatively low-priced model and was purchased very recently. The selectivity of the set is excellent, it is sensitive and a good station getter, whilst the reproduction is very fair for a small table model. Even when tuned to the local station, however, the receiver needs retuning two or three times during the first hour after switching on, if reproduction is to remain at its best. The total drift after some hours must reach from five to ten kilocycles, since if the set is correctly tuned to the local station at the end of an evening's use, it is found that on switching on next day the tuning is so far out as to render the programme almost inaudible. On the short-wave range, of course, the defect is even more serious, and a station may vanish completely in less than an hour. Probably the receiver described is worse than most, but it is surprising how few receivers are entirely free from drift if critically tested on the short-wave ranges.

THE constant need for readjustment of tuning, particularly on short waves, is a serious failing of many otherwise excellent receivers. The author of this article describes a method of minimising this "creeping" by adapting the Franklin Master Oscillator circuit, originally devised for transmitters, to the frequency-changers of superheterodyne receivers.

It is instructive to analyse the causes of oscillator drift. Heat has been given as the primary cause, and this can change the frequency in two principal ways. The first is due to mechanical changes in the coils and condensers which form the oscillatory circuit. The effective inductance or capacity will vary slightly as the materials from which the coil or condenser are built expand and alter the resonant frequency. Other components of the circuit may contribute to this change, but probably to a much lesser extent. The obvious remedy is to protect the parts from heat, which is fairly well achieved by the usual open chassis construction in which each coil is placed in its own screening can. Ample spacing will also assist materially. The small commercial receiver used as an example probably suffers from this particular trouble, since all the parts are close together in one cabinet, the coils are within the chassis but not separately screened, and are quite near to the valves. As a result the whole assembly becomes hot after a short time.

The second effect of heat is in the oscillator valve itself, or the oscillator section of the frequency changer when this is a multiple valve such as the triode-pentode. Heating of a valve is well known to affect its characteristics slightly, and this change will react upon the frequency of any oscillator of which the valve forms a part. The remedy here is to employ a circuit having the best possible inherent stability, and in which the valve characteristics play the least possible part. In so doing the annoying effect of a varying supply voltage upon frequency is also reduced.

An exactly similar problem is met with in the frequency control of transmitting stations. The early self-oscillating circuits changed their frequency considerably from time to time, partly through the effect of changing atmospheric temperature and humidity upon the component parts, and partly through valve heating. Quartz crystal control has become general for transmitters working upon fixed wavelengths because it largely overcomes this difficulty. The crystal can be designed to be almost independent

Tuning Drift—

of temperature, but unfortuntely it is not easily adapted to control an oscillator working on continously variable frequencies. When a transmitter requires to be frequently changed to new and widely different frequencies it is the commercial practice to employ a master control oscillator, which must be variable but substantially free from drift. An extremely effective circuit has been designed by that leading engineer, C. S. Franklin, and is well known as the "Franklin Master Oscillator." It occurred to the writer that the excellent properties of this circuit would be equally useful in the superheterodyne frequency

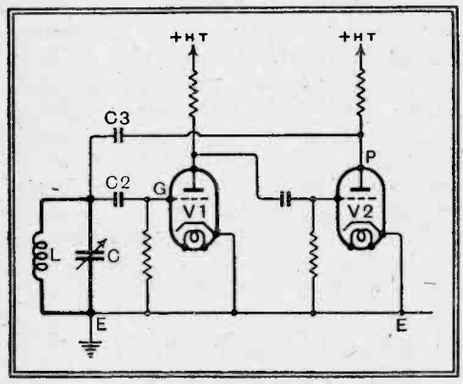

Fig. 1.—The Franklin Master Oscillator, with which a high degree of frequency stability can easily be attained.

changer, and it is the purpose of this article to put forward the suggestion and describe some results obtained from it.

The essentials of the Franklin oscillator are shown in Fig. 1. The oscillatory circuit comprises an inductance L and variable condenser C. In the commercial designs these components are cleverly constructed so that their combined resonant frequency is self-compensated for changes of temperature. This is done by an elaborate structure in which a cylindrical condenser encloses the inductance, and is fully described in the textbook "Short Wave Wireless Communication" by Ladner & Stoner. It would be out of place to describe it here, since simpler methods will suffice for receiving work. The condenser C will now form part of the ganged tuning assembly, whilst the coil L should be of very rigid construction and protected by an effective metal screen well removed from sources of heat. In the writer's experimental receiver the oscillator coil was solenoid wound on a paxolin tube some 2 in. in diameter, using 22 SWG DCC wire held rigidly in position by a coating of varnish. This coil and the condenser C were placed in a copper screening box about 6 in. cube, well clear of valves and other components likely to get hot, and containing no other parts. The valves forming the oscillator were placed in another similar box separated by a small air space from the first. In this way heat from the valves was prevented from reaching the coil or condenser, and the arrangement proved entirely adequate in practice.

For the present purpose we are not concerned with very small changes of frequency due to the changes of temperature from day to day, but only with changes caused by the heating of the receiver in use. Actually the arrangement described proved adequate for exacting short-wave work, and would hardly be necessary in a broadcast receiver where it would be quite sufficient to employ a standard ganged condenser and coil screen, provided that these were placed in a cool and well-ventilated position on the chassis.

Minimising Temperature Effects

More important is the method used by Franklin to overcome valve heating effects. In Fig. 1 two valves, V1 and V2, together form the oscillator. These may be triodes, and are coupled together to form a two-stage amplifier, as shown. The characteristics of such an amplifier are, first, that the overall amplification will be much greater than that of a single valve, and, secondly, that the input potential between G and E will be in phase with the amplifier output potentials built up between P and E. If, therefore, the output be coupled back to the input by a small condenser C3, the phase will be appropriate to give positive feedback, and a very slight coupling will be sufficient to cause oscillation.

In the practical arrangement two very small condensers C2 and C3 couple the first grid G and second anode P respectively to the tuned circuit LC. The effective reaction path is, therefore, C2 and C3 in series. The potentials fed back must be built up across the circuit LC, which is in parallel with the reaction path. At non-resonant frequencies the reactance of LC is low, while that of the small condensers C2 and C3 is relatively high. LC, therefore, forms a virtual short-circuit and prevents feed-back from occurring. At resonance, however, LC becomes equivalent to a high resistance, across which potentials can exist. At exact resonance this resistance is at a maximum; feedback is, therefore, greatest, and the circuit will tend to oscillate at that frequency.

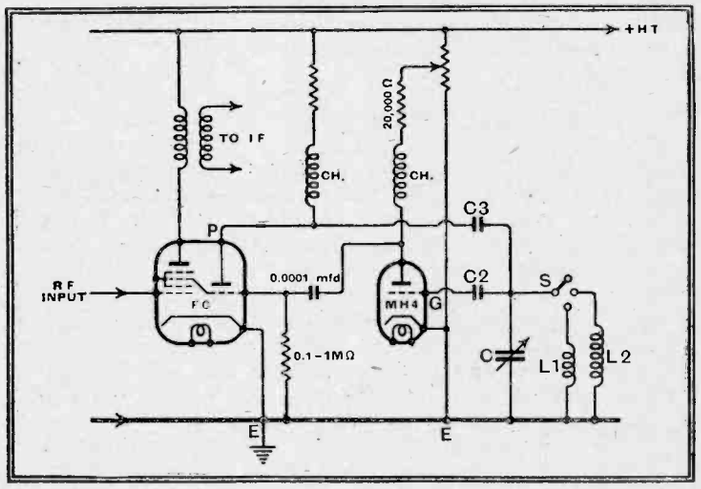

Fig. 2.—Adapting the Franklin circuit to the frequency changer of a superheterodyne. The triode section of the FC valve replaces V2 of Fig. 1.

The stability of the arrangement depends on two factors, both arising out of the smallness of the capacities C2 and C3. These can be small because of the high amplification of the two-valve arrangement compared with any single valve that might be used, and in commercial oscil-

lators they are of the order [illegible] o-microfarad each. As a resu[illegible] ap-ling between G or P and th[illegible] is very weak indeed, being th[illegible] s of very high reactance. Firs[illegible] uces the load placed upon the [illegible] y the valves and external circ[illegible] result that LC is very little dam[illegible] d thus tends to oscillate very stably at its own resonant frequency as a "High Q" circuit. If a very low-loss coil and condenser can be used, their efficiency will not be spoilt through the connection of valves, as is usually the case. Secondly, the high reactance of C2 and C3 reduce the effect of changes in valve characteristics upon the circuit LC. For example, a change in valve capacity of several mmfds. would be in series with C2 of only 1 mmfd., and so would appear as a change of less than 1 mmfd. across C. Therefore, the frequency of oscillation is almost entirely determined by the circuit LC, and only very slightly by the valves, which could even be changed without affecting the calibration of the oscillator materially.

Working Circuit for Receivers

The application of this oscillator to a practical frequency changer is much simpler than Fig. 1 might suggest, and requires only one additional triode, which might form part of a combined valve when economy is essential. Fig. 2 shows how it can be done in the case of a triode-hexode, octode or any similar valve. Here the oscillator grid and anode of the changer form "V2" and an additional triode forms V1. Apart from increased stability there are several quite real advantages of arranging the valves in this way, which in themselves might justify use of the circuit in certain cases. One of these is the fact of very ready oscillation at broadcast frequencies and the ability to build up at P an oscillatory voltage much in excess of that needed by most frequency changers. In practice it is possible to obtain fairly uniform voltage over a wide range of values of C, for, whereas increasing capacity (or wavelength) tends to reduce the potential across LC and, therefore, the output from the oscillator, a reduction in wavelength is accompanied by a falling-

Tuning Drift—

off in efficiency in the resistance-capacity coupling between the two valves, and has a compensating effect which tends to keep the output constant. If a control of oscillation is wanted for experimental purposes or to provide the optimum oscillator output for different wavebands, it can be easily provided by the potentiometer shown feeding the anode of V1. The ease with which a large output can be obtained is very useful if it is desired to operate the oscillator on a harmonic, as, for example, when working at a short wavelength without changing the oscillator coil. To use the third harmonic, for example, the amplitude of the oscillator might be stepped up from 10 volts to 30 volts. Assuming some 30 per cent. of harmonic to be present, we should then get the optimum heterodyne conditions for a frequency changer requiring 10 volts at the "oscillator grid." This point will be mentioned later.

A second advantage of the arrangement is the simplification of wave-change switching. It will be noticed that only a single coil need be changed, and that one end of this is permanently "earthed." The usual reaction coil or cathode tapping is absent. Thus, wavebands can be selected by a single-pole switch, whereby coils can be interchanged or merely connected in parallel with L. One such coil is shown in Fig. 2 at L2, to indicate how easily the change from medium to long broadcast wavelengths can be made. An even simpler method of making that change is to short-circuit a portion of the coil or employ a tapping upon it. These methods, which are considered likely to introduce undue losses in the ordinary way, may be safe in the present case because of the ample margin of reaction and amplitude available. The temptation to allow excessive losses must be guarded against, however, if it necessitates an increase in the condensers C2 and C3 beyond 2 or 3 mmfd., to yield oscillation, as the stability of the circuit would then be reduced.

Practical Details

The preceding remarks refer mainly to wavelengths between 200 and 2,000 metres, over which the oscillator has been thoroughly tested and found to function readily even with components of comparatively poor quality. Only the condensers C2 and C3 are out of the ordinary run of components. Any soundly built neutralising condensers that happen to be available could be used, or, in the case of C2, the well-known makeshift of two wires insulated with thin sleeving and twisted together will be found quite effective. The minimum capacity of the 15-mmfd. midget condensers now much used in short-wave work, such as Webb's "Economy" condensers, is about 2 to 3 mmfd. and just about low enough, particularly for C3, which may be somewhat the larger with advantage, as it works from a rather lower impedance circuit.

Proceeding now to the important field of short-wave reception, or the short-wave ranges of all-wave receivers, the circuit remains equally valuable, but is, unfortunately, a little less easy to design. An oscillator exactly as in Fig. 2 will oscillate down to about 50 metres when using ordinary valves such as an FC4 octode and MH4 triode. This falling-off in performance is due entirely to the reduced amplification of the triode and reduced efficiency of the R-C coupling at high frequencies, and it can be overcome by any methods which will remove these losses. In other respects the circuit remains effective, although the lower dynamic resistance of LC also tends to reduce feedback, and may demand larger values of C2 and C3. One helpful alteration is the addition of a good RF choke in the anode of the triode, as shown at CH. This helps to keep up the coupling efficiency as frequency is raised. An advantage is to be expected from the use of more efficient frequency changers designed for higher frequency working, such as the latest triode-pentodes. There seems also no reason why low-capacity valve types should not be employed, or why the triode should not be replaced by a high-efficiency pentode. This field of experiment has not been fully investigated, and the writer cannot accept responsibility for any difficulty which may be found in getting satisfactory results at the higher frequencies, although such tests as have been made indicate that no serious trouble is to be feared if valves of suitable type are selected. For the ultra-short-wave region an interesting field of experiment is suggested by the use of acorn valves, by which it should be possible to extend the range of the oscillator considerably.

Extreme Stability Attained

In conclusion, it may be interesting to describe what has actually been achieved in an experimental receiver, in which the valves mentioned are used. The receiver is an all-wave (so-called!) communications type, tuning from 550 to 9 metres. The oscillator is not ganged to the preselector circuits in this case, but employs a separate condenser, the circuit LC being placed in a separate box as at first described. It is thus possible to make use of a large ratio of C to L, and cover a wide tuning range. In the medium broadcast region the oscillator tunes from 140 to 500 metres, and can produce 40 volts of oscillatory potential over this range. At 200 metres the frequency drift has been carefully measured, and is of the order of 100 cycles in an hour after switching on. To attain this figure the oscillator must be carefully adjusted to its most stable condition, but without any particular care in the choice of C2, C3 or anode potentials; the worst drift measured has been 300 cycles per hour.

Wavelengths between about 70 and 140 metres are reached by the use of the second harmonic of the broadcast range, and provided that effective RF amplification and two or three effective preselecting circuits are used, there seems to be no objection to so doing. It is, however, important to stress that harmonic operation can only be recommended if the receiver contains one regenerative or two plain RF stages, and the preselection is effective, as otherwise various types of interference are probable.

The oscillator only needs two ranges, obtained by a single-pole two-way switch, somewhat as shown in Fig. 2, and by attention to details the second range has been reduced to approximately 36 to 70 metres. This covers the 50-metre broadcast and 40-metre amateur band. The 30-, 25- and 19-metre broadcast bands and the 20-metre amateur band are covered using the first harmonic of the oscillator, while wavelengths from 19 to 9 metres are covered by the fourth harmonic. It is found that with adequate RF amplification the loss in sensitivity at 20 metres due to the use of the harmonic is hardly noticeable to the ear, whilst at 10 metres sensitivity is still greater than local background noise will allow. The use of harmonics, therefore, seems justified by the delightfully simple wave-change switching which it allows.

Isolation of Oscillator Circuit

Stability is such that at all wavelengths above 20 metres the beat note given by a CW telegraph station against the usual IF beat oscillator does not vary noticeably to the ear on tuning the RF stages. This lack of "pulling" is probably assisted by the fact that the oscillator circuit LC is effectively isolated from the RF circuits by the Franklin arrangement, as will be seen from the diagrams. It is most useful in amateur communication working. Exact measurements of drift and oscillator output will not be quoted here because at the higher frequencies the methods of measurement available are not considered absolutely reliable. However, the circuit has completely overcome two particular defects which had been troublesome previously when using a more normal oscillator. One of these was a change in beat note when receiving CW through the local amateur transmitter, due to small changes in supply mains voltage caused by the load taken by the transmitter, and which in turn affected the oscillator frequency. The second was also an effect for which the mains were responsible, since it had been found that fluctuations in mains voltage at certain times of the day affected tuning to an extent that made it difficult to hold signals for prolonged periods through a crystal filter, and also caused noticeable changes in the tuning of broadcast or telephony stations on wavelengths below 20 metres. The present arrangement has reduced this defect to an extent when it ceases to be important, and can only be detected under the worst circumstances. These improvements have proved so helpful to the writer that it is hoped that the Franklin oscillator will also prove useful to other experimenters who design highly selective receivers for their own use.

New Apparatus Reviewed

Recent Products of the Manufacturers

VARLEY THREE-BAND COIL UNIT

IN order to simplify the construction of an all-wave superheterodyne receiver Varley has introduced a three-range coil unit consisting of six coils, waveband switches and all the necessary padding and trimming condensers, the whole being assembled on a small metal chassis.

It is intended to be used with a triode hexode frequency-changer valve and a 465 kc/s IF amplifier, the coils being tuned by a two-gang condenser, each section of which has a capacity of 0.0005 mfd. No trimmers are needed on the condensers, and if they are fitted they must be removed.

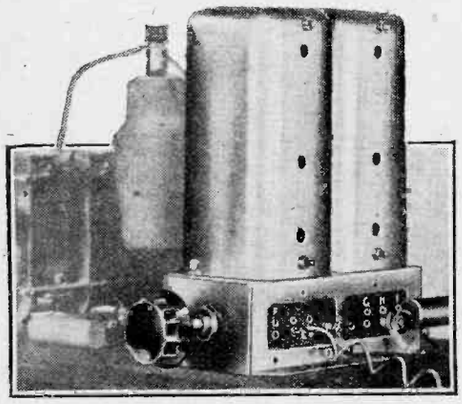

Varley three-range superhet coil unit with gang-condenser and valve assembled as a complete frequency-changer.

Terminals are arranged on each side of the base and so placed that if care is given to the layout quite short leads only are required to connect the coil unit to the gang condenser and valveholder.

The instructional leaflet gives the circuit arrangement of a superhet using this coil unit and that portion relating to the frequency-changer was adopted for our tests. One alteration only was made, and this was to join the low-potential end of the oscillator grid leak to the *cathode* of the valve and not to the earth line, as shown in the circuit. The oscillator did not function correctly until this change was made.

In the experimental assembly used for testing the unit the two-gang condenser was placed on the left-hand side of the baseboard, the valveholder was in the middle, and the coil unit on the right. This enabled quite short leads to be used, and it was found possible to tune down to 14 metres on the short-wave range.

The two-gang condenser used had minimum capacities of 10 m-mfds. each section, but its maximum was only 475 m-mfds. On the short-wave range the coverage was 14 to 39 metres, but with the recommended size condensers, i.e., 0.0005 mfd., it should be possible to tune up to 40 metres. The medium- and long-wave ranges gave the requisite coverages to include all the usual broadcast stations.

The frequency-changer valve used was an Osram X41, and the remainder of the set consisted of *The Wireless World* IF amplifier with a suitable power pack and output stage.

The sensitivity on all bands was very good indeed, and no difficulty was experienced in tuning-in the 19-metre American short-wave station W2XAD late in the afternoon. Six or more short-wave broadcast stations were received at good strength, and all were of real programme value.

Some second channel, or image, interference was noticed, since no RF stage is used, but this was not troublesome.

On the other broadcast bands the performance of the coil unit was exemplary, and all the worth-while stations could be received easily and, in many cases, at more than comfortable volume.

Apart from slight adjustments to the signal circuit trimmers no other trimming was found necessary, and apparently the circuits had been correctly aligned at the factory.

This coil unit has the type No. BP120, and its price is 19s. 6d. The makers are Varley, Cambridge Place, Burrage Road, Woolwich, London, S.E.18.

POLAR MICRO HORIZONTAL DRIVE

THE special feature of this new Polar drive is that two reduction ratios are provided, although only a single knob is fitted. The mechanism is arranged so that the initial rotation of the knob drives the condenser at a 10 to 1 reduction, but, on reversing the direction of rotation, a 50 to 1 reduction is automatically brought into use for about one revolution of the knob. This corresponds to just three divisions on the 0-100 scale.

Incidentally, the dial has three engraved scales as well as the names of the principal British and European broadcasting stations.

Two of the scales are engraved in wavelengths for the medium and the long waves, while the third is the 0-100 division scale already mentioned.

The identification marks against the station names are correct for a Polar condenser and coils of 157 and 2,200 mH, though it is essential, of course, that the minimum capacities across the tuned circuits be of the correct values.

These can be found quite easily by trial and error methods, for it is only necessary to adjust the condenser trimmers so that any one station tunes in in the centre of its mark on the scale. If the coil values are correct and, in the case of a superheterodyne, the oscillator padding capacities are of the right values, then the dial markings will indicate the correct position of the pointer for all the other stations.

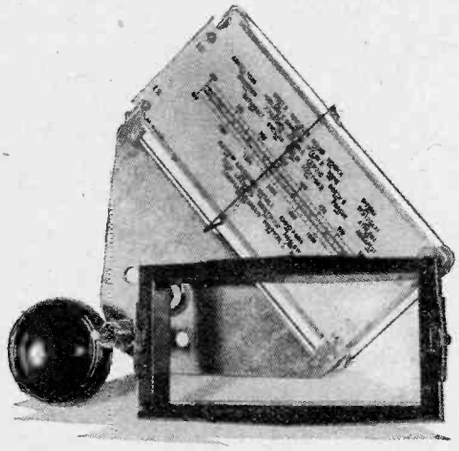

Two-ratio horizontal condenser drive made by Polar.

This Polar dial is sturdily made and, like all other of this firm's products, very well finished. The pointer travels horizontally across the dial, and is driven by a cord which is kept taut by springs. There is no backlash either in the pointer or in the driving mechanism. It is a drive that will stand up to hard wear.

The makers are Wingrove and Rogers, Ltd., Arundel Chambers, 188-189, Strand, London, W.C.2, and the price, including a moulded escutcheon and two lampholders for illuminating the dial, is 9s. 6d.

Television Programmes

Vision, 45 Mc/s. Sound, 41.5 Mc/s.

THURSDAY, JANUARY 6th.

3, Cabaret, with Ingrid Linck and the Aspidistras. **3.20,** British Movietonews. **3.30,** Theatre Parade: Act 1 of the Shaftesbury Theatre production, "Thank you Mr. Pepys."

9. O.B. from Bertram Mills' Circus at Olympia. **9.10,** Starlight: Phyllis Robins. **9.20,** Running commentary on a Shove Ha'penny match, by Frank Benton. **9.30,** Gaumont-British News. **9.40,** Variety, including Wences and Ronald Frankau.

FRIDAY, JANUARY 7th.

3, O.B. from Bertram Mills' Circus at Olympia. **3.5,** Fashion Forecast. **3.20,** Gaumont-British News. **3.30,** "From Æsop's Fables"; a Pepler masque with the B.B.C. Television Orchestra. **3.50,** Cartoon film. **3.55,** Preview: Highlights of the Week.

9, Fashion Forecast. **9.10,** "Plus ca Change." **9.25,** O.B. from Bertram Mills' Circus at Olympia. **9.35,** "The Monkey's Paw": a play in three scenes by W. W. Jacobs and Louis M. Parker. **9.55,** Preview.

SATURDAY, JANUARY 8th.

3, O.B. from Bertram Mills' Circus at Olympia: a final visit. **3.20,** The Hotchkiss Marionettes. **3.30,** Roy Fox and his Band.

9, Roy Fox and his Band. **9.20,** Gaumont-British News. **9.30,** "The Billiard Room Mystery," adapted from Stephen Leacock's story.

MONDAY, JANUARY 10th.

3, "Rush Hour,": a revue by Herbert Farjeon with music by Walter Leigh played by the B.B.C. Television Orchestra. **3.50,** British Movietonews.

9, Starlight. **9.10,** Alexander Calder's Mobiles. **9.25,** Gaumont-British News. **9.35,** "The Pen Is Mightier," a play by Robert Victor.

TUESDAY, JANUARY 11th.

3, Marcella Salzer in songs. **3.5,** Friends from the Zoo. **3.20,** Gaumont-British News. **3.30,** "The Monkey's Paw."

9, Speaking Personally—IX. Leon M. Lion. **9.10,** Friends from the Zoo. **9.25,** British Movietonews. **9.35,** Cabaret.

WEDNESDAY, JANUARY 12th.

3, Cabaret: commère, Sheila Douglas-Pennant; cast includes Walsh and Barker at the piano. **3.20,** British Movietonews. **3.30,** 111th edition of Picture Page.

9, Cabaret as at 3 p.m. **9.20,** Gaumont-British News. **9.30,** 112th edition of Picture Page.

PRINCIPAL BROADCASTING STATIONS OF EUROPE

Arranged in Order of Frequency and Wavelength

(Stations with an Aerial Power of 50 kW. and above in heavy type)

Station.	kc/s.	Tuning Positions.	Metres.	kW.
Ankara (Turkey)	152		1973.5	5
Kaunas (Lithuania)	153		1961	7
Radio Romania (Brasov) Romania	160		1875	150
Hilversum, No. 1 (Holland) (10 *kW.* till 1440)	160		1875	150
Lahti (Finland)	166		1807	150
Moscow, No. 1 (Komintern) (U.S.S.R.)	172		1744	500
Paris (Radio Paris) (France)	182		1648	80
Istanbul (Turkey)	185		1622	5
Irkutsk (U.S.S.R.)	187.5		1600	20
Deutschlandsender (Germany)	191		1571	60
National (Droitwich)	200		1500	150
Minsk (U.S.S.R.)	208		1442	35
Reykjavik (Iceland)	208		1442	16
Motala (Sweden)	216		1389	150
Novosibirsk, (U.S.S.R.)	217.5		1379	100
Warsaw, No. 1 (Poland)	224		1339	120
Luxembourg	232		1293	150
Moscow, No. 2 (Stchelkovo) (U.S.S.R.)	232		1293	100
Kalundborg (Denmark)	240		1250	60
Vienna, No. 2 (Austria)	240		1250	0.5
Kiev, No. 1 (U.S.S.R.)	248		1209.6	100
Vigra (Aalesund) (Norway)	253		1186	10
Tashkent (U.S.S.R.)	256.4		1170	25
Oslo (Norway)	260		1153.8	60
Leningrad, No. 1 RW53 (Kolpino) (U.S.S.R.)	271		1107	100
Tromsö (Norway)	282		1065	10
Tiflis (U.S.S.R.)	283		1060	35
Saratov (U.S.S.R.)	340		882.3	20
Finmark (Norway)	347		864	10
Archangel (U.S.S.R.)	350		857.1	10
Rostov-on-Don (U.S.S.R.)	355		845.1	20
Budapest, No. 2 (Hungary)	359.5		834.5	18
Sverdlovsk (U.S.S.R.)	375		800	40
Voroneje (U.S.S.R.)	390		769	10
Boden (Sweden)	392		765	0.6
Banska-Bystrica (Czechoslovakia) (15 *kW.* after 1700)	392		765	30
Geneva (Switzerland)	401		748	1.3
Moscow, No. 3 (U.S.S.R.)	413.5		726	100
Ostersund (Sweden)	413.5		726	0.6
Oulu (Finland)	431		696	10
Tartu (Estonia)	518		579	0.5
Hamar (Norway)	519		578	0.7
Innsbruck (Austria)	519		578	1
Ljubljana (Yugoslavia)	527		569.3	6.3
Viipuri (Finland)	527		569.3	10
Bolzano (Italy)	536		559.7	10
Wilno (Poland)	536		559.7	50
Budapest, No. 1 (Hungary)	546		549.5	120
Beromünster (Switzerland)	556		539.6	100
Athlone (Irish Free State)	565		531	100
Klaipeda (Lithuania)	565		531	10
Palermo (Italy)	565		531	3
Stuttgart (Germany)	574		522.6	100
Alpes-Grenoble, P.T.T. (France)	583		514.6	20
Madona (Latvia)	583		514.6	50
Vienna, No. 1 (Austria)	592		506.8	100
Rabat (Morocco)	601		499.2	25
Sundsvall (Sweden)	601		499.2	10
Florence (Italy)	610		491.8	20
Cairo, No. 1 (Egypt)	620		483.9	20
Brussels, No. 1 (Belgium)	620		483.9	15
Lisbon (Portugal)	629		476.9	15
Tröndelag (Norway)	629		476.9	20
Christiansand (Norway)	629		476.9	20
Prague, No. 1 (Czechoslovakia)	638		470.2	120
Lyons, P.T.T. (France)	648		463	100
Petrozavodsk (U.S.S.R.)	648		463	10
Cologne (Germany)	658		455.9	100
North Regional (Slaithwaite)	668		449.1	70
Jerusalem (Palestine)	668		449.1	20
Sottens (Switzerland)	677		443.1	100
Belgrade (Yugoslavia)	686		437.3	20
Paris, P.T.T. (France)	695		431.7	120
Stockholm (Sweden)	704		426.1	55
Rome, No. 1 (Italy)	713		420.8	100
Hilversum, No. 3 (Holland)	722		415.4	17
Kharkov, No. 1, (U.S.S.R.)	722		415.4	10
Fredrikstad (Norway)	722		415.4	1
Tallinn (Estonia)	731		410.4	20
Madrid, EAJ2 (Spain)	731		410.4	3
Seville (Spain)	731		410.4	5.5
Munich (Germany)	740		405.4	100
Marseilles, P.T.T. (France)	749		400.5	100
Pori (Finland)	749		400.5	1
Katowice (Poland)	758		395.8	12
Scottish Regional (Westerglen)	767		391.1	70
Scottish Regional (Burghead)	767		391.1	60
Stalino (U.S.S.R.)	776		386.6	10
Toulouse, P.T.T. (France)	776		386.6	120
Leipzig (Germany)	785		382.2	120
Barcelona, EAJ1 (Spain)	795		377.4	7.5
Lwow (Poland)	795		377.4	50
Welsh Regional (Penmon) (Anglesey)	804		373.1	5
Welsh Regional (Washford)	804		373.1	70
Milan, No. 1 (Italy)	814		368.6	50
Bucharest (Romania)	823		364.5	12
Kiev, No. 2, (U.S.S.R.)	832		360.6	35
Agen (France)	832		360.6	1.5
Berlin (Germany)	841		356.7	100
Sofia (Bulgaria)	850		352.9	100
Norwegian Relay Stations	850		352.9	—
Valencia (Spain)	850		352.9	3
Simferopol, (U.S.S.R.)	859		349.2	10
Strasbourg (France)	859		349.2	100
Poznan (Poland)	868		345.6	16
London Regional (Brookmans Park)	877		342.1	70
Linz (Austria)	886		338.6	15
Graz (Austria)	886		338.6	15
Helsinki (Finland)	895		335.2	10
Limoges, P.T.T. (France)	895		335.2	1.5
Hamburg (Germany)	904		331.9	100
Dniepropetrovsk (U.S.S.R.)	913		328.6	10
Toulouse (Radio Toulouse) (France)	913		328.6	60
Brno (Czechoslovakia)	922		325.4	32
Brussels, No. 2 (Belgium)	932		321.9	15
Algiers (Algeria)	941		318.8	12
Göteborg (Sweden)	941		318.8	10
Breslau (Germany)	950		315.8	100
Paris (Poste Parisien) (France)	959		312.8	60
Bordeaux-Sud-Ouest (France)	968		309.9	30
Odessa (U.S.S.R.)	968		309.9	10
Northern Ireland Regional (Lisnagarvey)	977		307.1	100
Bologna (Radio Marconi) (Italy)	986		304.3	50
Torun (Poland)	986		304.3	24
Hilversum No. 2 (Holland) (15 *kW.* till 1810)	995		301.5	60
Bratislava (Czechoslovakia)	1004		298.8	13.5
Midland Regional (Droitwich)	1013		296.2	70
Chernigov (U.S.S.R.)	1013		296.2	4
Barcelona, EAJ15 (Spain)	1022		293.5	3
Cracow (Poland)	1022		293.5	2
Oviedo (Spain)	1022		293.5	0.7
Königsberg, No. 1 (Heilsberg) (Germany)	1031		291	100
Parede (Portugal)	1031		291	5
Leningrad, No. 2, RW70 (U.S.S.R.)	1040		288.5	10
Rennes-Bretagne (France)	1040		288.5	120
West of England Regional (Washford)	1050		285.7	50
Bari No. 1 (Italy)	1059		283.3	20
Paris (Radio Cité) (France)	1068		280.9	0.8
Tiraspol, RW57 (U.S.S.R.)	1068		280.9	10
Bordeaux-Lafayette (France)	1077		278.6	35
Zagreb (Yugoslavia)	1086		276.2	0.7
Falun (Sweden)	1086		276.2	2
Madrid, EAJ7 (Spain)	1095		274	5
Vinnitsa (U.S.S.R.)	1095		274	10
Kuldiga (Latvia)	1104		271.7	10
Naples No. 1 (Italy)	1104		271.7	10
Moravska-Ostrava (Czechoslovakia)	1113		269.5	11.2
Radio Normandie (Fécamp) (France)	1113		269.5	15
Alexandria, No. 1 (Egypt)	1122		267.4	0.5
North-East Regional (Stagshaw)	1122		267.4	60
Nyiregyhaza (Hungary)	1122		267.4	6.25
Hörby (Sweden)	1131		265.3	100
Turin, No. 1 (Italy)	1140		263.2	7
Genoa (Italy)	1140		263.2	10
Trieste (Italy)	1140		263.2	10
London National (Brookmans Park)	1149		261.1	20
North National (Slaithwaite)	1149		261.1	20
Scottish National (Westerglen)	1149		261.1	50
Kosice (Czechoslovakia)	1158		259.1	10
Monte Ceneri (Switzerland)	1167		257.1	15
Copenhagen (Denmark)	1176		255.1	10
Nice-Corse (France)	1185		253.2	60
Frankfurt (*and Relays*) (Germany)	1195		251	25
Prague, No. 2 (Czechoslovakia)	1204		249.2	5
Lille, P.T.T. (France)	1213		247.3	60
Rome, No. 2 (Italy)	1222		245.5	60
Gleiwitz (Germany)	1231		243.7	5
Cork (Irish Free State)	1235		242.9	1
Saarbrücken (Germany)	1249		240.2	17
Riga (Latvia)	1258		238.5	15
Florence, No. 2 (Italy)	1258		238.5	1
Bilbao, EAJ8 (Spain)	1258		238.5	1
Nürnberg (Germany)	1267		236.8	2
Radio Mediterranée (Juan-les-Pins) (France)	1276		235.1	27
Dresden (Germany)	1285		233.5	0.25
Aberdeen	1285		233.5	1
Klagenfurt (Austria)	1294		231.8	5
Vorarlberg (Austria)	1294		231.8	5
Danzig	1303		230.2	0.5

Station.	kc/s.	Tuning Positions.	Metres.	kW.
Swedish Relay Stations	1312	.....	228.7	—
Magyarovar (Hungary)	1321	.....	227.1	1.25
German Relay Stations	1330	.....	225.6	—
Montpellier, P.T.T. (France)	1339	.....	224	1.5
Lodz (Poland)	1339	.....	224	2
Dublin (Irish Free State)	1348	.....	222.6	0.5
Rjukan (Norway)	1348	.....	222.6	0.15
Salzburg (Austria)	1348	.....	222.6	2
Tampere (Finland)	1348	.....	222.6	0.7
Cairo No. 2 (Egypt)	1348	.....	222.6	0.5
Königsberg (Germany)	1348	.....	222.6	2
Nottoden (Norway)	1357	.....	221.1	3
Italian Relay Stations	1357	.....	221.1	—
L'Ile de France (France)	1366	.....	219.6	2
Basle (Switzerland)	1375	.....	218.2	0.5
Berne (Switzerland)	1375	.....	218.2	0.5
Warsaw, No. 2 (Poland)	1384	.....	216.8	7
Lyons (Radio Lyons) (France)	1393	.....	215.4	25
Stara-Zagora (Bulgaria)	1402	.....	214	2
Vaasa-Vasa (Finland)	1420	.....	211.3	10
Alexandria, No. 2 (Egypt)	1429	.....	209.9	0.5
Turku (Finland)	1429	.....	209.9	0.5
Miskolc (Hungary)	1438	.....	208.6	1.25
Paris (Eiffel Tower) (France)	1456	.....	206	7
Pecs (Hungary)	1465	.....	204.8	1.25
Belgian Relay Stations	1465	.....	204.8	0.1
Bournemouth	1474	.....	203.5	1
Plymouth	1474	.....	203.5	0.3
Binche (Belgium)	1487	.....	201.7	0.1
Belgian Relay Stations	1492	.....	201.1	0.1
Nimes (France)	1492	.....	201.1	0.7
Albacete (Spain)	1492	.....	201.1	0.2
Santiago (Spain)	1492	.....	201.1	0.5
Belgian Relay Stations	1500	.....	200	0.1
Pietarsaari (Finland)	1500	.....	200	0.25
Radio Alcalá (Spain)	1500	.....	200	0.2
Karlskrona (Sweden)	1530	.....	196	0.2
Liepàja (Latvia)	1734	.....	173	0.1

SHORT-WAVE STATIONS OF THE WORLD

Station.	Call Sign.	kc/s.	Tuning Positions.	Metres.	kW.
Batavia (Java)	YDA	3,040	.....	98.68	10
Vancouver (Canada)	VE9BK	4,750	.....	62.63	—
Kharbarovsk (U.S.S.R.)	RV15	4,273	.....	70.20	12
Caracas (Venezuela)	YV5RC	5,800	.....	51.72	1
San Jose (Costa Rica)	TIGPH	5,820	.....	51.52	0.5
Vatican City (Vatican State)	HVJ	5,970	.....	50.26	15
Moscow (U.S.S.R.)	RW59	6,000	.....	50.00	20
Mexico City (Mexico)	XEBT	6,000	.....	50.00	1
Montreal (Canada)	CFCX	6,005	.....	49.96	—
Havana (Cuba)	COCO	6,010	.....	49.92	2.5
Prague (Podebrady) (Czechoslovakia)	OLR2A	6,010	.....	49.92	30
Bogota (Colombia)	HJ3ABH	6,010	.....	49.92	1
Zeesen (Germany)	DJC	6,020	.....	49.83	50
Boston (U.S.A.)	W1XAL	6,040	.....	49.67	10
Miami (U.S.A.)	W4XB	6,040	.....	49.67	2.5
Daventry (Gt. Britain)	GSA	6,050	.....	49.59	10-50
Cincinnati (U.S.A.)	W8XAL	6,060	.....	49.50	10
Philadelphia (U.S.A.)	W3XAU	6,060	.....	49.50	10
Motala (Sweden)	SBO	6,060	.....	49.50	1
Lima (Peru)	OAX4Z	6,080	.....	49.36	15
Chicago (U.S.A.)	W9XAA	6,080	.....	49.34	0.5
Nairobi (Kenya)	VQ7LO	6,083	.....	49.31	0.5
Toronto (Bowmanville) (Canada)	CFRX	6,090	.....	49.26	0.5
Hong Kong (China)	ZBW2	6,090	.....	49.26	2.6
Johannesburg (South Africa)	ZTJ	6,100	.....	49.20	5
Bound Brook (U.S.A.)	W3XAL	6,100	.....	49.18	35
Chicago (U.S.A.)	W9XF	6,100	.....	49.18	10
Belgrade (Yugoslavia)	YUA	6,100	.....	49.18	1
Manizales (Colombia)	HJ4ABB	6,105	.....	49.12	1
Daventry (Gt. Britain)	GSL	6,110	.....	49.10	10-50
Calcutta (India)	VUC	6,110	.....	49.10	0.5
Pittsburgh (U.S.A.)	W8XK	6,140	.....	48.86	40
Winnipeg (Canada)	CJRO	6,150	.....	48.78	2
San Jose (Costa Rica)	TIPG	6,410	.....	46.80	0.5
Riobamba (Ecuador)	HC1FG	6,620	.....	45.31	2
Amateurs	.....	7,000 to 7,300	.....	42.86 to 41.10	0.01
Moscow (U.S.S.R.)	RKI	7,540	.....	39.79	25
Prangins (Radio-Nations) (Switz'l'd)	HBP	7,780	.....	38.48	20
Budapest (Hungary)	HAT4	9,125	.....	32.88	5
Madrid (Spain)	EAQ2	9,480	.....	31.65	20
Rio de Janeiro (Brazil)	PRF5	9,500	.....	31.58	12
Bangkok (Siam)	HS8PJ	9,510	.....	31.55	5
Daventry (Gt. Britain)	GSB	9,510	.....	31.55	10-50
Melbourne (Australia)	VK3ME	9,510	.....	31.55	1.5
Skamlebaek (Denmark)	OZF	9,520	.....	31.51	6
Hongkong (China)	ZBW3	9,520	.....	31.49	2.6
Jelöy (Norway)	LKC	9,520	.....	31.49	1
Schenectady (U.S.A.)	W2XAF	9,530	.....	31.48	25
Zeesen (Germany)	DJN	9,540	.....	31.45	5-40
Suva (Fiji)	VPD2	9,540	.....	31.45	3
Tokio (Japan)	JZK	9,540	.....	31.46	50
Prague (Podebrady) (Czechoslovakia)	OLR3A	9,550	.....	31.41	30
Zeesen (Germany)	DJA	9,560	.....	31.38	5-40
Lima (Peru)	OAX4T	9,560	.....	31.38	10
Bombay (India)	VUB	9,565	.....	31.36	4.5
Millis (U.S.A.)	W1XK	9,570	.....	31.35	10
Daventry (Gt. Britain)	GSC	9,580	.....	31.32	10-50
Lyndhurst (Australia)	VLR	9,580	.....	31.32	1
Philadelphia (U.S.A.)	W3XAU	9,590	.....	31.28	10
Sydney (Australia)	VK2ME	9,590	.....	31.28	20
Huizen (Holland)	PCJ	9,590	.....	31.28	60
Prangins (Radio-Nations) (Switz'l'd)	HBL	9,595	.....	31.27	20
Moscow (U.S.S.R.)	RAN	9,600	.....	31.25	20
Rome (Italy)	I2RO3	9,635	.....	31.13	25
Sourabaya (Java)	YDB	9,640	.....	31.11	1
Lisbon (Portugal)	CS2WA	9,655	.....	31.09	2
Buenos Aires (Argentina)	LRX	9,660	.....	31.06	10
Madrid (Spain)	EAQ	9,860	.....	30.43	10
Lisbon (Portugal)	CSW	9,940	.....	30.18	5
Bandoeng (Java)	PMN	10,260	.....	29.24	1.5
Ruysselede (Belgium)	ORK	10,330	.....	29.04	9
Buenos Aires (Argentina)	LSX	10,350	.....	28.99	12
Teneriffe (Canary Isles)	EAJ43	10,350	.....	28.99	4
Bandoeng (Java)	PLP	11,010	.....	27.25	3
Lisbon (Portugal)	CSW	11,040	.....	27.17	5
Prangins (Radio-Nations) (Switz'l'd)	HBO	11,400	.....	26.31	20
Motala (Sweden)	SBP	11,700	.....	25.63	1
Winnipeg (Canada)	CJRX	11,720	.....	25.60	2
Paris (Radio-Colonial) (France)	TPA4	11,720	.....	25.60	12
Warsaw (Poland)	SPO	11,530	.....	26.01	10
Huizen (Holland)	PHI	11,730	.....	25.57	25
Daventry (Gt. Britain)	GSD	11,750	.....	25.53	10-50
Zeesen (Germany)	DJD	11,770	.....	25.49	5-40
Boston (U.S.A.)	W1XAL	11,790	.....	25.45	10
Tokio (Japan)	JZJ	11,800	.....	25.42	50
Vienna (Austria)	OER2	11,800	.....	25.42	1.5
Rome (Italy)	I2RO4	11,810	.....	25.40	25
Daventry (Gt. Britain)	GSN	11,820	.....	25.38	10-50
Wayne (U.S.A.)	W2XE	11,830	.....	25.36	10
Lisbon (Portugal)	CWS4	11,830	.....	25.36	5
Prague (Podebrady) (Czechoslovakia)	OLR4A	11,840	.....	25.34	30
Zeesen (Germany)	DJP	11,850	.....	25.31	5-40
Daventry (Gt. Britain)	GSE	11,860	.....	25.29	10-50
Pittsburgh (U.S.A.)	W8XK	11,870	.....	25.27	24
Paris (Radio-Colonial) (France)	TPA3	11,880	.....	25.23	12
Moscow (U.S.S.R.)	RNE	12,000	.....	25.00	20
Reykjavik (Iceland)	TFJ	12,235	.....	24.52	7.5
Warsaw (Poland)	SPW	13,635	.....	22.00	10
Amateurs	.....	14,000 to 14,400	.....	21.42 to 20.84	0.01
Sofia (Bulgaria)	LZA	14,970	.....	20.04	1.5
Zeesen (Germany)	DJL	15,111	.....	19.85	5-40
Vatican City (Vatican State)	HVJ	15,123	.....	19.84	10
Daventry (Gt. Britain)	GSF	15,140	.....	19.82	10-50
Bandoeng (Java)	YDC	15,160	.....	19.80	1.5
Daventry (Gt. Britain)	GSO	15,180	.....	19.76	10-50
Hongkong (China)	ZBW4	15,190	.....	19.75	2.6
Zeesen (Germany)	DJB	15,200	.....	19.74	5-40
Pittsburgh (U.S.A.)	W8XK	15,210	.....	19.72	18
Huizen (Holland)	PCJ	15,220	.....	19.71	60
Prague (Podebrady) (Czechoslovakia)	OLR5A	15,230	.....	19.70	30
Paris (Radio-Colonial) (France)	TPA2	15,243	.....	19.68	12
Boston (U.S.A.)	W1XAL	15,250	.....	19.67	10
Daventry (Gt. Britain)	GSI	15,260	.....	19.66	10-50
Wayne (U.S.A.)	W2XE	15,270	.....	19.65	10
Zeesen (Germany)	DJQ	15,280	.....	19.63	5-40
Buenos Aires (Argentina)	LRU	15,290	.....	19.62	7
Daventry (Gt. Britain)	GSP	15,310	.....	19.60	10-50
Schenectady (U.S.A.)	W2XAD	15,330	.....	19.57	18
Zeesen (Germany)	DJR	15,340	.....	19.56	5-40
Budapest (Szekesfehervar) (Hungary)	HAS3	15,370	.....	19.52	6
Zeesen (Germany)	DJE	17,760	.....	16.89	5-40
Wayne (U.S.A.)	W2XE	17,760	.....	16.89	10
Huizen (Holland)	PHI	17,770	.....	16.88	25
Bound Brook (U.S.A.)	W3XAL	17,780	.....	16.87	5-35
Daventry (Gt. Britain)	GSG	17,790	.....	16.86	10-50
Bangkok (Siam)	HS8PJ	19,020	.....	15.77	5
Bandoeng (Java)	PMA	19,350	.....	15.50	60
Daventry (Gt. Britain)	GSH	21,470	.....	13.97	10-50
Wayne (U.S.A.)	W2XE	21,520	.....	13.94	10
Daventry (Gt. Britain)	GSJ	21,530	.....	13.93	10-50
Pittsburgh (U.S.A.)	W8XK	21,540	.....	13.93	6
Daventry (Gt. Britain)	GST	21,550	.....	13.92	10-50

Tone Control Unit

FREQUENCY CORRECTION FOR AUDIO AMPLIFIERS

(Compiled from information furnished by the General Electric Company)

THE small unit described in this article provides a wide range of tone control which will be found a valuable asset both for home recording and for gramophone reproduction. It can also be used with a microphone for public address work and for any purpose where a simple and ready means is needed to apply frequency correction to an audio amplifier.

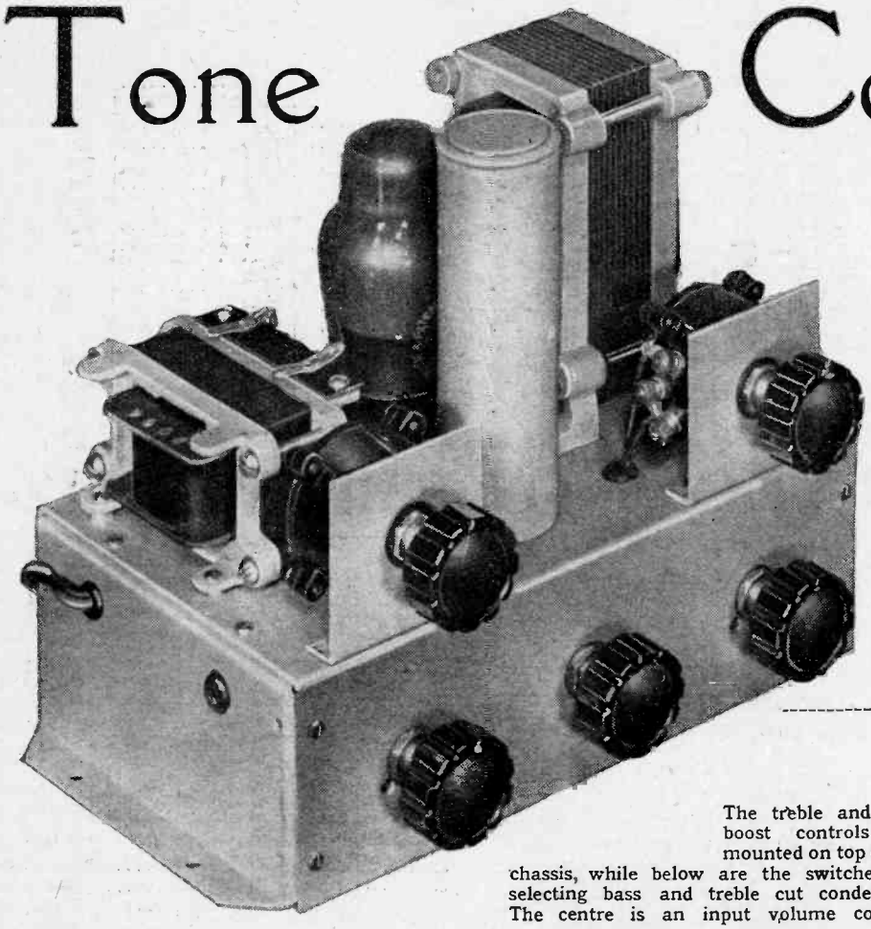

The treble and bass boost controls are mounted on top of the chassis, while below are the switches for selecting bass and treble cut condensers. The centre is an input volume control.

WHEN designing an audio-frequency amplifier for general use the customary practice is to arrange the circuit so that it has a substantially "flat" characteristic; that is to say, it gives constant amplification throughout the audible scale.

An amplifier of this kind, however, will not necessarily give faithful reproduction under all conditions, since the subsidiary apparatus with which it may be used will not always possess the same desirable characteristics. Often the deficiencies are not due to lack of care in the design but are brought about by the necessity to compromise between cost and performance.

Such compromises do not always preclude the possibility of obtaining faithful reproduction, as it is possible, and quite legitimate, to modify the amplifier's characteristic to compensate for deficiencies elsewhere in the equipment.

Then, again, certain factors beyond the control of the designer may have to be taken into account, one such being the acoustic properties of halls, etc., or a linear characteristic may not always give the best reproduction of speech and music in the open air.

Were an amplifier required for one particular purpose only, its frequency response could easily be arranged to give the desired performance, but it would not be flexible, and if used for another function and with different subsidiary apparatus, would almost certainly be far from satisfactory.

If, then, in any general-purpose amplifier a departure from a linear condition is required, such compensation should be controllable, and, furthermore, it should be possible to introduce correction into all parts of the audible scale.

The small unit illustrated and described here has been designed to serve such a function, and it has been built in the form shown to enable anyone possessing an audio amplifier to use it for any of the purposes for which one embodying tone control circuits would normally have to be employed.

Home recording is possibly as good an example as any that could be called to mind for which an amplifier with versatile tone control is essential.

Opinions naturally vary regarding the amount of correction that should be

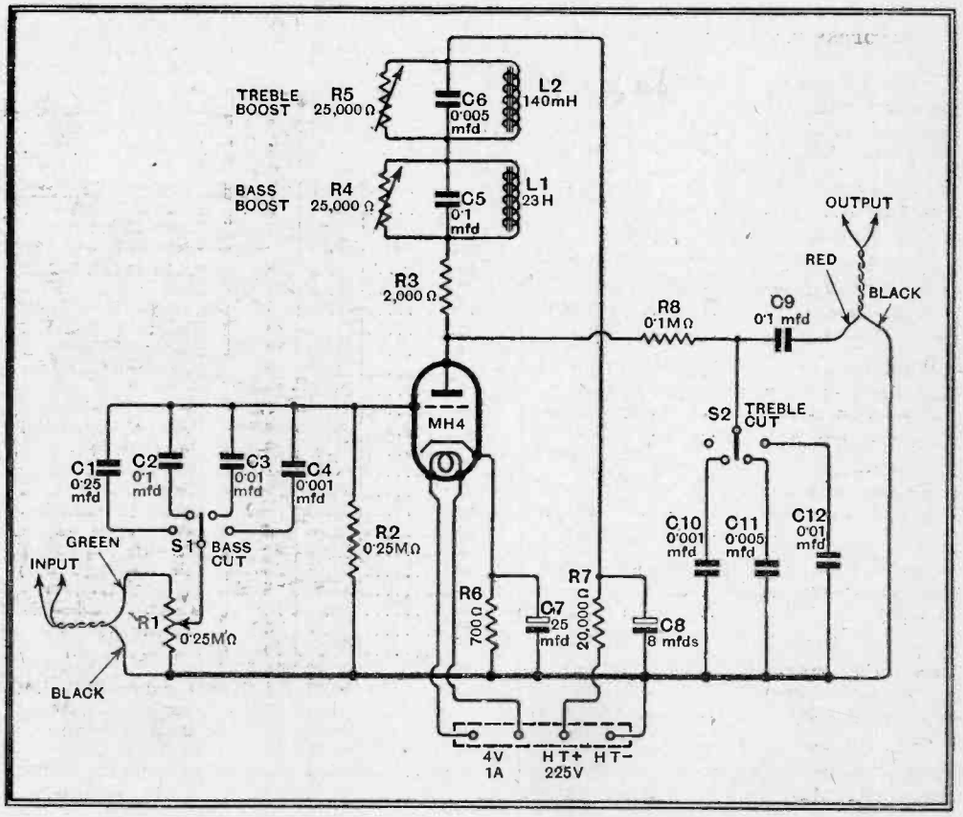

Theoretical circuit diagram of the tone control unit.

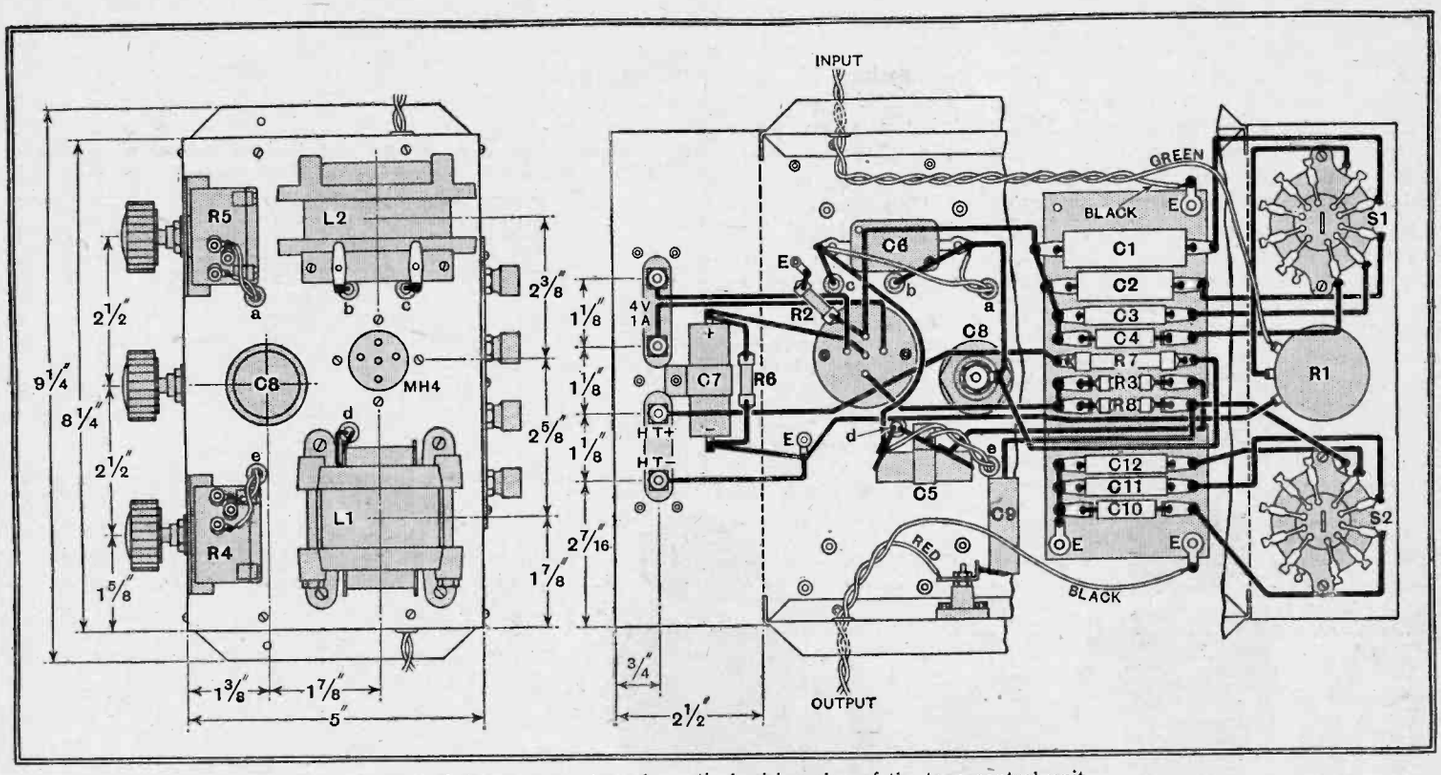

Layout of the components and practical wiring plan of the tone control unit.

applied, and also as to the parts of the frequency band where it is desirable.

In recording it is generally necessary to restrict the amplitude at very low frequencies, as some cutting heads and also pick-ups are inclined to jump out of the groove if the amplitude is too great.

If this practice is followed, then, when reproducing the finished record, the bass register should be boosted to compensate for the attenuation introduced at the time of recording.

Suppressing Needle Scratch

It has often been suggested that an upward tilt in the treble is an advantage when recording, as if the reverse form of correction is used during the play-back, record surface noise, or needle scratch as it is familiarly known, can be reduced without spoiling the upper register.

The tone control unit consists of a single-valve low-gain amplifier with two iron-cored chokes, L1 and L2, tuned by condensers C5 and C6 respectively, connected in the anode circuit, and each is shunted by a variable resistance of 25,000 ohms.

The input is applied to the grid of the valve through one of four condensers, C1, C2, C3 and C4. As the impedance of a condenser varies with frequency and is inversely proportional to the capacity, small values will introduce considerable attenuation at very low frequencies, but far less at the high audio frequencies. Likewise, a very large condenser will not have a marked effect at any frequency. These condensers thus serve the function of bass attenuation.

On the output side of the valve is also a series of condensers of different values, but in this case they are connected in such a way that they form a parallel impedance path. A large value of capacity here produces a low-impedance shunt which will attenuate the high frequencies more than the low, the amount of attenuation being dependent on the size of the condenser. This forms the treble cut. It should be noted that while a condenser of some value should always be in circuit on the input side the switching at the output end must be arranged so that in one position *no* capacity is in circuit. If any capacity is left in shunt with the output it will counteract the effect of the treble boost circuit L2 C6.

The values of the various components have been chosen so that with L1 and L2 short-circuited by their respective resistances R4 and R5—zero resistance position—and with switch S1 set to include C1 in the input circuit and S2 on a blank contact the response of the amplifier is substantially flat, as shown by A in the set of curves reproduced on the next page.

With resistances R4 and R5 adjusted to maximum values in each case and the switches left in the positions just mentioned, the bass and the treble responses are accentuated, curve B indicating this condition.

It will be realised, of course, that as this

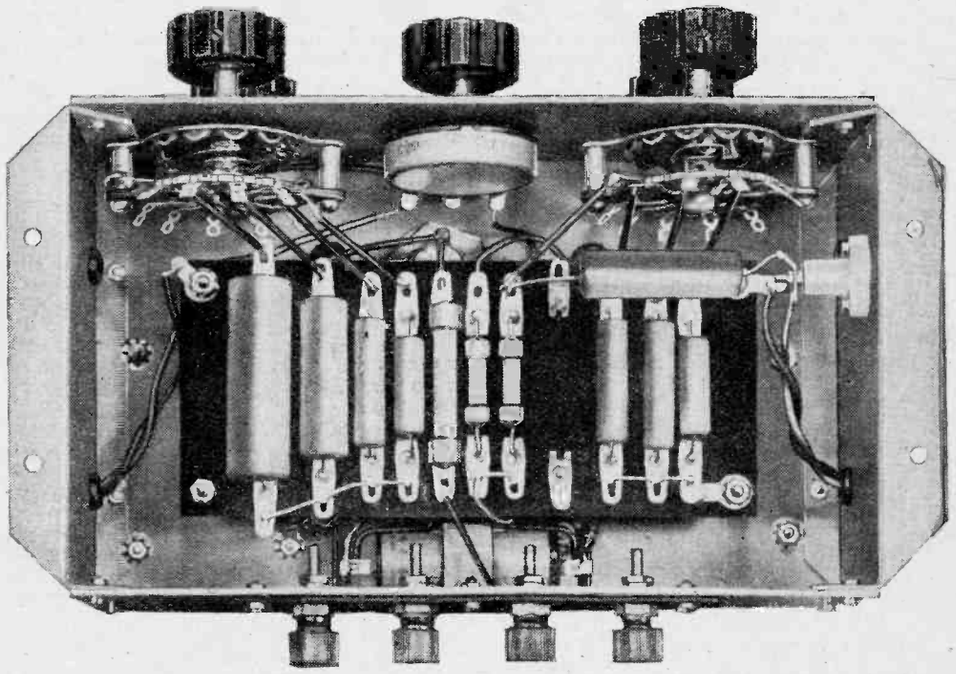

The bass cut condensers are mounted on the left of the group board, while on the right are the three condensers for treble cut.

Tone Control Unit—

curve was obtained with maximum resistance, i.e., 25,000 ohms, across each boost circuit, it represents the extreme condition, and that intermediate values of resistance will produce less rise at each end of the scale. These two resistances thus form variable controls for bass and treble boost.

Now by short-circuiting the boost chokes and setting switches S1 and S2 so that condensers C4 and C12 are in circuit the unit's characteristic takes the form shown by curve C. This is again an extreme condition and less cut in both bass and treble will occur with the intermediate values provided.

Other extreme cases are shown by the dotted line curves D and E. The former represents a condition of full bass cut and maximum treble lift, while the latter is the reverse of this condition.

Any desired characteristic between the limits shown can be obtained by suitable adjustment of the various controls provided. The datum point on the curves from which the gain or loss in decibels is measured is 400 c/s, and the amplification of the stage with the flat response of curve A is 4.5.

One other control is provided, and this is R1, which is an input volume control of 250,000 ohms. Its value is high enough to suit most pick-ups, but it could, of course, be changed for any reasonable value.

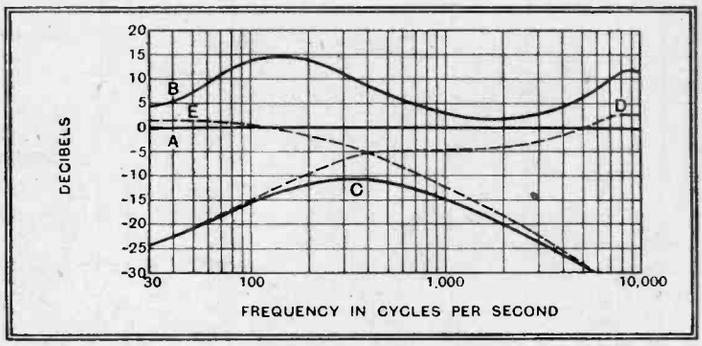

Set of curves showing the various frequency characteristics that can be obtained with the unit. These curves are explained in detail in the text.

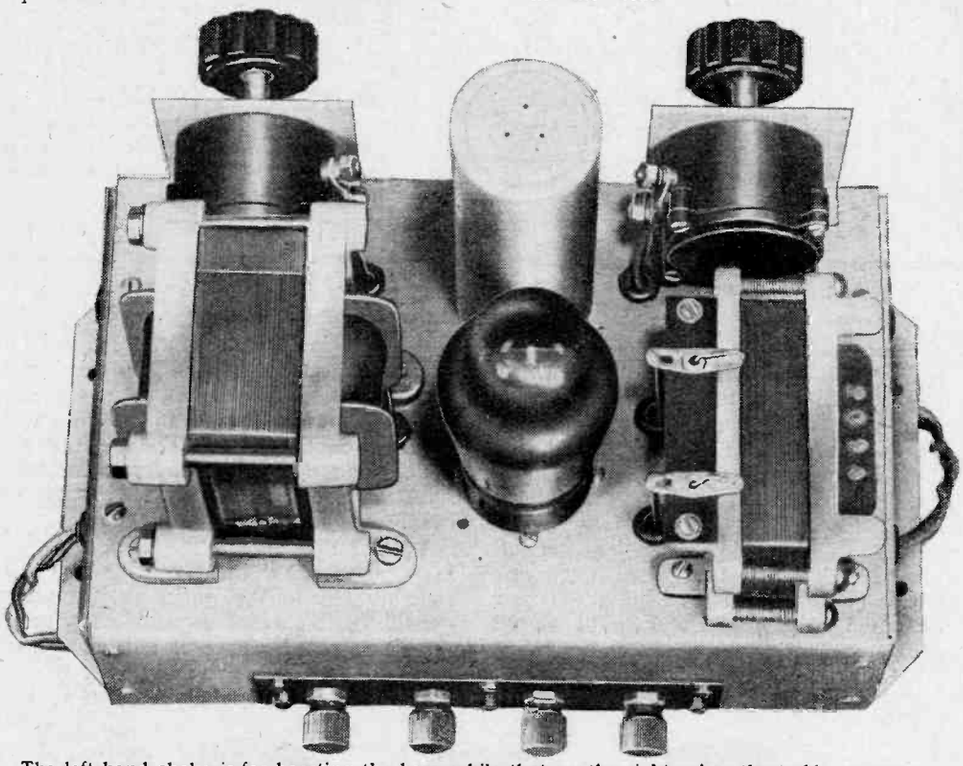

The left-hand choke is for boosting the bass, while that on the right raises the treble response. Their respective variable resistances are behind and adjacent to each choke.

Little need be said regarding the constructional work save for the fact that the group board carrying most of the fixed resistances and small condensers, and which is clearly shown in the illustrations, should not be placed in position until all the other parts have been assembled and wired.

The drawing of the underneath of the chassis has been arranged to show the position of the few components that are located between the group board and the chassis.

LIST OF PARTS

1 LF choke, 140 m/H — **Haynes Radio**

1 LF choke, 23 H — **Haynes Radio TL/8**

Condensers:—

- 2 0.001 mfd., 350 volts, tubular, **C4, C10** — **Polar-NSF**
- 2 0.005 mfd., 350 volts, tubular, **C6, C11** — **Polar-NSF**
- 2 0.01 mfd., 350 volts, tubular, **C3, C12** — **Polar-NSF**
- 3 0.1 mfd., 350 volts, tubular, **C2, C5, C9** — **Polar-NSF**
- 1 0.25 mfd., 350 volts, tubular, **C1** — **Polar-NSF**
- 1 25 mfds., 25 volts, electrolytic, **C7** — **T.C.C. "FT"**
- 1 8 mfds., 500 volts working, electrolytic, **C8** — **T.C.C. 902**

2 Volume controls, 25,000 ohms, **R4, R5**, — **Haynes Radio**

1 Volume control, 250,000 ohms, **R1** — **Dubilier "B"**

Resistances:

- 1 700 ohms, ½ watt, **R6** — **Dubilier F½**
- 1 2,000 ohms, ½ watt, **R3** — **Dubilier F½**
- 1 100,000 ohms, ½ watt, **R8** — **Dubilier F½**
- 1 20,000 ohms, 1 watt, **R7** — **Dubilier F1**
- 1 0.25 Mohm, ½ watt, **R2** — **Dubilier F½**

2 Switches, 2-pole, 4-way, single-bank, with locator plates, **S1, S2** — **B.T.S. Type C124**

4 Terminals — **Belling-Lee "R"**

1 Valve holder, 5-pin (without terminals) **Clix Chassis Mounting Standard Type VI**

1 Resistance group board — **Haynes Radio**

1 Midget Stand-off Insulator — **Eddystone 1019**

1 Terminal strip — **Haynes Radio**

Chassis: 8 × 5 × 2½in. — **B.T.S.**

Miscellaneous: — **Peto-Scott**

1 length systoflex, small quantity No. 18 tinned copper wire, 9 rubber grommets, etc. Screws: 28 ¼in. 6 BA; 4 ½in. 6 BA; 4 ½in. 4 BA, all with nuts and washers.

Valve: 1 MH4 — **Osram**

The Radio Industry

THE Osram DA100 indirectly heated triode, which, in a suitable circuit, is capable of an anode dissipation of 100 watts and is used in high-power amplifiers, has been reduced in price from £10 10s. to £8 8s.

M.R. Supplies has moved to larger premises at 68, New Oxford Street, London, W.C.1.

Halcyon Radio announce that, due to increased costs of material and labour, the price of the Halcyon T200 Television receiver has been increased from 40 gns. to 45 gns.; this price includes free installation and one year's maintenance.

Radiomart, 44, Holloway Head, Birmingham, 1, have issued a useful booklet for transmitters, would-be or actual, and short-wave enthusiasts. "G5N1's Manual," as it is called, costs 7½d. post free, and contains many circuit diagrams, valve data and other information, in addition to a catalogue section of special receiving and transmitting apparatus.

Marconi-Ekco Instruments, Ltd., announce the introduction of an Interference Measuring Set, Acoustic Measuring Equipment and a Noise Meter. Descriptive leaflets are available. Address: Electra House, Victoria Embankment, London, W.C.2.

New leaflets describing the Radiochron series of receivers, with which an electric clock is combined, have just been issued by Radiochron, Ltd., Oaklands Works, Oaklands Road, Cricklewood, London, N.W.2.

A new transmitting beam power amplifier, designated as RCA 814, has been issued by the Radio Corporation of America.

High power-sensitivity makes this new valve especially suited for use as an RF power amplifier, oscillator, and frequency multiplier. In class C operation it is capable of giving a power output of 130 watts, or more, with a grid driving power of only 1.5 watts.

The technical features of the 814 include a ceramic base, top-cap anode connection to ensure high insulation and low grid-anode capacity, and effective shielding to minimise the need for neutralisation.

Readers' Problems

A Selection of Queries dealt with by the Information Bureau, and chosen for their more general interest, is published.

"Hot" Leads

THE revival of interest in the straight TRF receiver, particularly in its more ambitious form, has again focused attention on the problem of combining high RF amplification with stability. Almost everyone realises that instability is caused by unwanted inter-circuit couplings, and that, when an exceptional amount of amplification is required, the greatest care must be taken to reduce these couplings to a minimum.

A correspondent who has not been entirely successful in this matter explains at length the precautions he has observed, particularly with regard to the wiring, and submits an explanatory diagram on which leads carrying RF potentials and currents are marked.

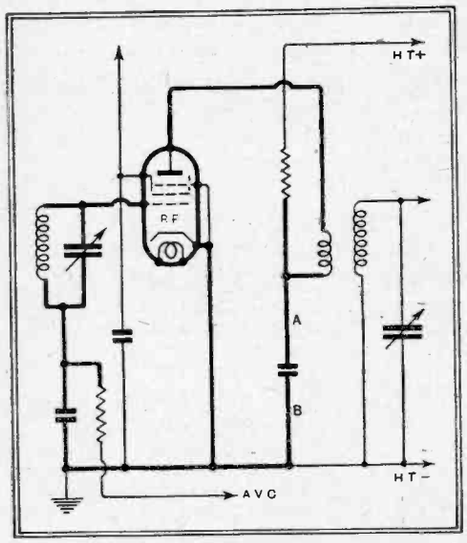

Fig. 1.—The heavy lines show leads carrying RF potentials and currents in grid and anode circuits of an RF stage. The wires A, B must not be regarded as "dead."

He has apparently fallen into the by-no-means uncommon error of regarding leads connecting decoupling condensers and resistances as "dead." On the contrary, they are usually very much alive; for instance, referring to Fig. 1, the wires connected to the decoupling condenser, and marked A, B, are part of the anode oscillatory circuit. For the sake of completeness, the grid circuit has also been filled in to show that decoupling connections in this circuit that are also often regarded as "dead" must be looked upon with suspicion as possible causes of interaction.

Heater Wiring

ANOTHER reader is considering the design of a straight set with a multi-stage RF amplifier, and asks about precautions against instability that might be taken in the valve-heater circuits.

In this matter he might adopt the practice exemplified in *The Wireless World* Straight Six, and arrange to connect one side of each heater to the chassis. Experiments show that this method of wiring greatly reduces inter-stage coupling through the heater wiring. The alternative plan of connecting a condenser between each heater and earth is more expensive, and also makes it impossible to earth the centre-tap of the heater transformer.

Listening Room Acoustics

WITH a really good modern receiver there is so little distortion that quality of reproduction is limited very largely by the characteristics of the loud speaker, and, to a much greater extent than formerly, by the acoustics of the room in which the set is to be operated. A reader who has rightly come to the conclusion that this latter point is of growing importance asks whether his experience is normal. He finds that quality is nearly always best in a room with a thick carpet, a number of hangings, and a quantity of "soft" furnishings. In a sparsely furnished room no amount of experimental alteration in the position of the loud speaker seems to give the same result.

The reverberation period of broadcast transmissions is generally considered to be best suited to rooms of *average* acoustic absorption. There can be little doubt that it is extremely difficult to obtain pleasing reproduction in a bare room with very few furnishings.

Our Television Set

SEVERAL readers who have recently developed an interest in television have enquired whether it would be practicable to omit the "sound" equipment of *The Wireless World* television receiver. The usual reason is that the querist has already a broadcast receiver covering the sound channel.

As the sound equipment is entirely separate there is no reason at all why the vision unit only should not be used. The set was described in detail in our issues of July 2nd, 9th, 16th, 23rd and 30th, 1937.

Effect of Aerial Alterations

WITHOUT some form of measuring instrument it is rather difficult to assess the benefits, or otherwise, of changes made to the aerial system. The human ear does not retain its impressions very long, and one is apt to forget what the performance of the set was like before the changes were made. A reader who asks some questions on this subject is therefore recommended to use some simple form of indicator; there is probably nothing simpler than a milliammeter in series with the anode supply of the IF valve; assuming, of course, that this valve is controlled with the AVC system. Maximum input from the aerial will then be indicated by minimum meter reading, but before making any too-hasty conclusions, our correspondent should read "Cathode Ray's" article on signal strength variations in our issue of Demember 30th.

As a general rule, observations are best carried out on long-wave stations; not only do these provide the steadiest signals, but the effect of any change for the better is more readily observable.

The "2 RF Straight Set"

SEVERAL correspondents have enquired about alternative valves for the "2-RF Straight Set" described in our issue of November 18th, 1937. When alternative valve types that do not embody their own screens are used, an external screen must be added.

Dial lights for this set can be connected to any convenient point of the heater-supply circuit.

Sparking Earth Lead

ALMOST all universal AC/DC receivers and some others as well have a condenser connected between the mains and the chassis, or in some such other way that the condenser is interposed between the mains and the earth terminal. It therefore follows that a small spark may be produced when the earth lead is connected. A correspondent who writes to us on this matter need not be perturbed by the production of this spark, provided it is not a heavy one. There should, however, be no direct conductive path between mains and earth, and it would perhaps be worth while to make a simple test of insulation resistance to satisfy himself that there is no appreciable leakage.

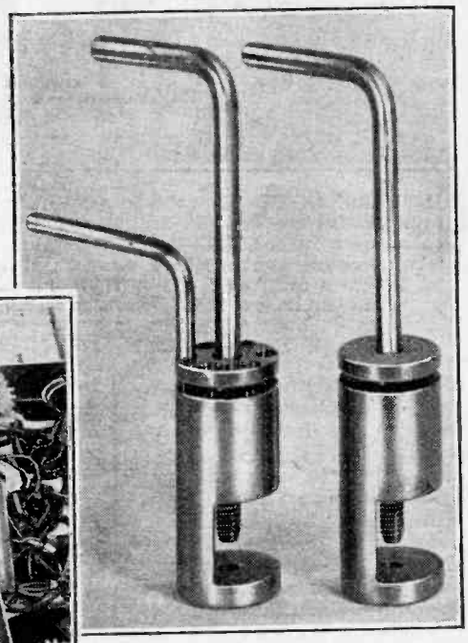

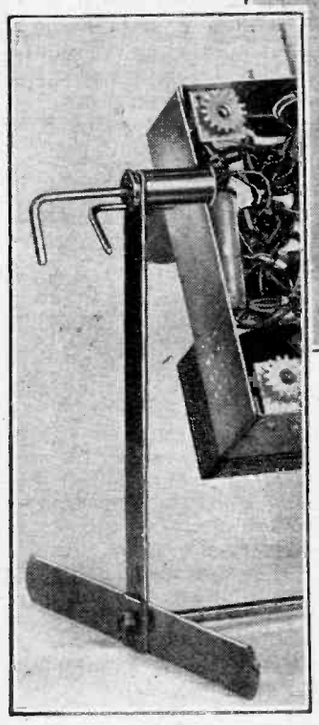

CHASSIS SUPPORT. This adjustable steel cradle, of American manufacture, is arranged to give easy access to any part of a radio chassis. The base may be extended up to 26 ins., and the clamps, though holding the chassis firmly, allow for tilting to the angle best suited to the work on hand.

RENEGADE TRANSMITTERS

The Position in France

DESPITE continuous representations, through the Brussels Checking Post, from the stations on whose wavelengths Radio - Normandie, Radio-Mediterranée and Radio-37 (Paris) are working, the situation remains unchanged.

Radio Normandie (15 kW), which has been operating on Moravska-Ostrava's wavelength of 269.5 metres, will feel a draught when the new Prague No. 2 high-powered transmitter at Melnik starts radiating on that wavelength on January 15th. Moravska-Ostrava is vacating this frequency for the present Prague No. 2 wavelength of 249.2 metres.

For nearly two years Radio-Mediterranée has been using the wavelength of 235.1 metres allotted to Bulgaria and Norway, whilst Radio-37's continued use since October, 1937, of Bucharest's wavelength has caused protests from Rumania.

Limiting Power

There are many more stations which operate on frequencies other than those allotted to them in the Lucerne Plan, but they cannot be remonstrated with as they were not signatories to the plan. This is, however, not the case with the three stations mentioned, for France was a signatory, and the Minister of Postes and Telegraphes is responsible for the international agreements of all French stations.

A correspondent of *The Times* reports that the French Government will shortly introduce a Bill forbidding private wireless stations, transmitting in English, to exceed a certain limit of power, or to use a wavelength not in accordance with the international broadcasting convention. This action is the result of strong representations by the British Government against the erection by the owners of Radio-Normandie of the 100-kW station at Louvetot, about half-way between Rouen and Le Havre. This station, which has not yet been brought into use, was described in *The Wireless World* a few months ago.

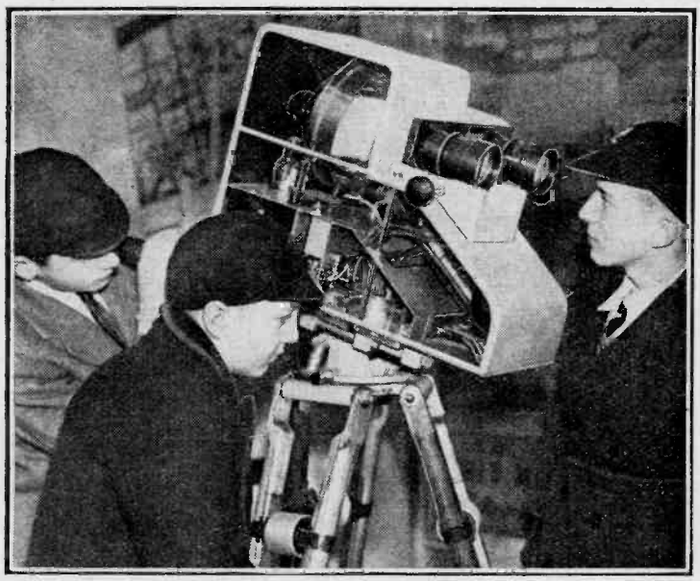

JUVENILE INTEREST at the Schoolboys' Own Exhibition, which is being held at the Imperial Institute, South Kensington, has focused on a new attraction. The picture shows young visitors examining a television camera on the H.M.V. stand where some of the more colourful television components are on show, and where, in addition, daily demonstrations of B.B.C. television transmissions take place.

WIRED WIRELESS

P.O. Experiments at Southampton

IT was announced in the House of Commons by Sir Walter Wormersley, Assistant P.M.G., on December 23rd, that an experimental wire broadcasting service was to be introduced at Southampton this year. This is part of the scheme for the distribution by wire of B.B.C. programmes as recommended in the Ullswater Committee's report of 1935, in which it states:

"We recommend that the ownership and operation of Relay Exchanges should be undertaken by the Post Office and the control of their programmes by the Corporation."

In addition to the wire network which will be installed, an experiment is to be made using the existing telephone wires.

NEWS OF

TELEVISING THE BOAT RACE

Super-Emitrons on the *Magician*?

AN imposing list of "outside" television broadcasts has been drawn up for the coming year, with sport in the top place.

Ironically, perhaps, the Boat Race offers fewer opportunities for television than for sound broadcasting. The ideal would be to install Super-Emitrons on the launch *Magician* to follow the crews all the way from Putney to Mortlake, but it just can't be done—at least not in 1938.

Probably the only possible way to televise the Boat Race this year will be to set up cameras at the winning post, which the staff have noted is conveniently near the Mortlake Brewery. Telephoto lenses should make it possible to show the crews for a minute or so before the winning post is reached.

Mobile Unit at Chiswick

The next job for the television "Flying Squad" will take them to the London Passenger Transport Board depot at Chiswick to show viewers how London's busmen are trained. This interesting event is scheduled for January 13th and 14th.

Where Are the Super-Emitrons?

The Super-Emitron camera is as precious, nearly, as the Koh-i-noor diamond, hence the use of only one specimen in

FEATURES OF THE WEEK'S PROGRAMMES

THURSDAY, JANUARY 6th.

Nat., 6.20, B.B.C. Empire Orchestra. 8, Rhythm Express: 8.45, Spain: talk by W. J. Entwistle.

Reg., 6.30, Songs without words. 7.30, An excerpt from the pantomime "Puss in Boots." 8.45, "The Geisha."

Abroad.

Leipzig, 6.55, Rossini's comic opera, "The Italian Girl in Algiers."

Rennes, 8.30, Saint-Saëns' Biblical opera, "Samson and Delilah."

FRIDAY, JANUARY 7th.

Nat., 6.25, George Formby in "A Lancashire Lad in London." 7.35, British Film Music—No. 1. The London Film Symphony Orchestra. 8.15, Tunes of the Town: "Cinderella" excerpt.

Reg., 8, A. J. Alan. 9.20, Variety from The Colston Hall, Bristol.

Abroad.

Bucharest, 6.10, Wagner's "The Mastersingers" from the Royal Opera.

Warsaw, 7.5, Warsaw Philharmonic Symphony Concert.

SATURDAY, JANUARY 8th.

Nat., 6.30, F.A. Cup Third Round; recorded extracts from a commentary on Arsenal *v.* Bolton Wanderers match. 9.20, Talk by Sir Stephen Tallents, B.B.C. controller of Public Relations: What Every Listener Knows.

Reg., 8, Forgotten sports and great wagers. 8.20, Sonata recital by Marie Wilson (violin), with Henry Bronkhurst at the piano. 9.15, Legends of the River Clyde.

Abroad.

Radio-Normandie, 8.40, Gala performance of the Topical Revue at the Théâtre Française, Rouen.

SUNDAY, JANUARY 9th.

Nat., 7, Orchestre Raymonde. 7.55, Service from St. Martin-in-the-Fields. 9.30, Holiday in Europe.

Sunday, January 9th (continued)

Reg., 6.35, "Mr. Pym Passes By": a comedy by A. A. Milne. 9.5, Sunday Orchestral concert—13: conducted by Malko.

Abroad.

Cologne, 7, Festival concert from the Beethovenhalle, Soloist Kulenkampff (violin).

Rennes-Bretagne, 8.30, "The Desert Song," relayed from the Théâtre Graslin, Nantes.

MONDAY, JANUARY 10th.

Nat., 7, Monday at Seven. 8, Serial, "The Count of Monte Cristo." 9.35, The Organ, the Dance Band and Me: with Reginald Foort and Billy Thorburn.

Reg., 7.30, The Bach family: J. S. Bach's great uncles and uncles. 9.15, The Life of Walter Barnes, a deep sea fisherman.

Abroad.

Budapest 1, 7, European Concert by Budapest Philharmonic.

Deutschlandsender, 8.20, Backhaus and the Berlin Philharmonic.

TUESDAY, JANUARY 11th.

Nat., 8, "You're the Girl," new radio musical. 9.20, How I Began: Debroy Somers. 10.15, Experimental Hour—4.

Reg., 8.10, Midland Parliament: Trades Unionism and Industry. 9, Ken Johnson and his West Indian Dance Orchestra.

Abroad.

Breslau, 7.10, Songs from the German peasant wars.

WEDNESDAY, JANUARY 12th.

Nat., 8, and 9.20, B.B.C. Symphony Orchestra from the City Hall, Newcastle. Concludes with Ravel's "Bolero."

Reg., 8, Tunes of the Town: an excerpt from "Aladdin." 9.30, After Dinner: cabaret.

Abroad.

All German stations, 7, Concert commemorating the Saar plebiscite of 1935. From Saarbrücken.

THE WEEK

the circus transmissions from Olympia. If two specimens had been available it would have been possible to fade up different portions of the arena; in actual fact, the cameramen are lucky to have the use of the "tunnel" into the ring, with the opportunity to track to and fro and change from long shots to comparative close-ups.

From a technical point of view, the next most interesting O.B. by television will be from the H.M.V. studios at St. John's Wood at the end of this month, when the mobile unit will show recording sessions in progress.

HONOURS LIST

THE names of three people who are all closely associated with broadcasting appear in the New Year's Honours List.

Miss Harriet Cohen, well known to listeners since her first broadcast in November, 1927, receives the C.B.E. Miss Gracie Fields receives the same honour. Mr. G. L. Marshall, Northern Ireland Regional Director, who joined the B.B.C. in 1924 and has successively been Station Director at Edinburgh, Glasgow, Newcastle and Belfast, receives the O.B.E.

BROADCASTING AND AIR RAIDS

THE B.B.C. staff have been informed that instructions are already drafted for general issue in case of air raids. Not that the Corporation is hourly expecting such a contingency, in spite of Press criticism of the programmes; the plans have been made just in case the need should ever arise.

Vulnerable Control Room

The arrangements include a stand-by control room in the basement. The existing control room on the top floor would make a good target, having only frosted glass between it and the heavens.

Actually Broadcasting House is well equipped for most emergencies. It cannot be plunged into darkness by any idiosyncrasies of the local power station, for the output from a storage battery automatically comes into circuit if the mains supply fails and can maintain enough light for the continuance of a broadcast programme until a secondary lighting supply from a Diesel-driven 100-kW generator comes into action—an operation requiring not more than two and a half minutes.

An emergency water supply would also be available from the 600ft. well which was sunk at the time the foundations were laid. At present this bore-hole makes an effective "earth" for reception purposes.

MERCHANT NAVY OPERATORS

AS a result of negotiations that have taken place between representatives of the Association of Wireless and Cable Telegraphists and of the firms employing marine radio officers, new rates of pay for wireless operators came into force on January 1st.

Wages will now range from £7 17s. 6d. to £12 per month for a beginner, and from £14 15s. to £22 per month for Grade 1, in addition to various allowances with food and accommodation whilst on board. Those employed by the principal wireless companies will become members of the Merchant Navy Officers' Pension Fund, which confers a pension at the age of sixty-five.

These new conditions should prove a great incentive to youths of seventeen and eighteen years of age to take up the marine wireless service as a career, and opportunities for employment are increasing for those who have passed their examination for the Postmaster-General's certificate.

B.B.C. AND OPERA

First Full-length Broadcast

DISTINGUISHED members of the British Operatic world have been engaged by the B.B.C. for the first full opera production in St. George's Hall by the recently formed Music Productions Unit. Massenet's "Manon" is the work chosen, and it will run without interruption for two hours on the National wavelength on January 21st, and Regionally on January 24th. The more condensed version, which Massenet himself produced for the Italian stage, will be used.

FROM ALL QUARTERS

Bone-conductor Headphones

ALTHOUGH originally designed for the use of deaf people, bone conduction is being used by a Danish firm of manufacturers for their latest type of headphones. A number of Danish hospitals and a metropolitan cinema have recently installed the bone-conductor headphones, which are designed for use with an ordinary broadcast receiver.

"Daventry Lunches" in Jo'burg

ACCORDING to reports reaching the B.B.C., South Africans are delighted with Empire transmissions 2 and 3, which are primarily intended for India and Ceylon. Apparently GSH on 13.97 metres thunders in during the morning and afternoon, and provides lunch-time programmes for workers in Cape Town and Johannesburg. In the evenings atmospherics are troublesome, but Zeesen overcomes these quite successfully on the 49-metre band.

All Eyes on Cairo

SIR NOEL ASHBRIDGE, B.B.C. Controller of Engineering, is packing his trunks so as to be in Cairo by January 29th, when the heads of broadcasting delegations meet in preliminary discussions before the official opening of the Conference on Radio Communications on February 1st. The inaugural ceremony will take place at 11 a.m. on that day in the Ceremonial Hall of the Egyptian University. Subsequent meetings will be held at the Heliopolis Palace Hotel.

I.E.E. Meeting

AT the informal meeting of the Wireless Section of the I.E.E. at Savoy Place, London, W.C.2, on Tuesday, January 25th, at 6.30, Mr. L. H. Bedford, M.A., will open a discussion on "Cathode-Ray Tubes for Wireless Purposes."

Measuring Instruments

THOSE interested in new developments in radio measuring instruments will find much useful information in the illustrated report of the Physical Society's exhibition, which will be included in our next week's issue.

AMERICA'S FIRST O.B. Television Unit is shown as it was delivered to the N.B.C. by the R.C.A. Manufacturing Co. One van accommodates the control room with cameras, microphones and the associated gear (the special parabolic microphone can be seen on the roof) and the other contains an independent micro-wave relay transmitter. The new mobile unit is to operate throughout the metropolitan area of New York, in conjunction with the present N.B.C. television transmitter at the top of the Empire State Tower.

Random Radiations

By "DIALLIST"

Many Inventions

YOU would be surprised if you knew how many radio inventions are sent along for my approval or otherwise, mostly by people whom I have never seen or heard of! About half of them are completely unoriginal, reviving as they do ideas that have already been tried and found not too good. And about 48 out of the remaining 50 per cent. would be so costly to manufacture that they are quite hopeless from the commercial point of view. Some of the ideas are ingenious, and just occasionally there is one which might possibly be of real use. Actually there is nothing that I dislike more than being consulted about inventions, especially if they have not been patented, for this sometimes leads to distinctly awkward happenings. I remember once being sent particulars of an invention which arrived about two days before an article of mine describing the construction of an almost exactly similar device appeared in one of the papers. The article had, of course, been written a long time before I received these particulars, and as the paper had already gone to press it was too late to stop its appearance. Nothing, however, would convince my correspondent that I had not filched his ideas.

Tuning Dials Galore

The device which most engages the amateur radio inventor is the tuning dial. The reasons are, I suppose, fairly obvious: the tuning dial is a thing that every set must have, and so far the perfect dial has not been evolved. And there are so many possible variations on the theme. You can make your pointer move over the scale or the scale move under the pointer. The movements of either may be radial or horizontal or vertical. You can arrange your stations alphabetically or in order of wavelengths or geographically by countries. But when all's said and done the man in the street is more or less satisfied with a simple dial which shows him the names of the stations that he wants to hear and indicates more or less accurately where to place the pointer in order to find them. And the radio manufacturer is satisfied, too. He's not going to scrap expensive machinery or to re-equip part of his factory in order to turn out dials which, though they may be a little bit better, are not quite the marvels that their inventors are apt to believe them to be.

Push-Button Tuning

RECENTLY I mentioned that receiving sets with "telephone dial" and similar methods of tuning had captured the hearts of the people of the United States. Some of the systems in use are highly ingenious. In most of the better grade sets a small electric motor is used to turn the condenser spindles. One interesting example of the push-button set has sixteen buttons. Of these, thirteen are for stations, one switches the set off, one puts the motor out of action and enables manual tuning to be done, and the last is used for what the Americans call scanning, and we term searching. Keep your finger on this button and the pointer travels slowly over the dial, bringing in station after station. When you find one that sounds attractive you release the pressure and the motor stops. Automatic tuning correction then gets to work and there is your station. It is indeed a lazy age; a description of this set says that motor scanning eliminates the labour (!) of tuning manually over the dial.

Something Really New

Still, push-button tuning has a great deal to recommend it, for it is a real novelty in wireless reception. Several systems were invented years ago, but they could not be of much practical use until automatic tuning correction was evolved. Another interesting possibility of push-button tuning is that it is easily linked up with remote control. It would be quite feasible to install the receiving set in the glory-hole under the stairs and have the loud speaker and the push-button dial in any other part of the house. I believe that we shall see a good many more British-made sets with this kind of tuning during the next few months. One big firm has already announced its intention of going all out for them and others are sure to follow suit. The idea is almost certain to become popular, for there is something very attractive about a set which automatically switches itself on and tunes in any one of a dozen or more stations when you press the appropriate button.

Break-through

A NORTH-COUNTRY reader writes to suggest that the instances of break-through in receiving sets, to which I referred in these notes a week or two ago, may not always be just what they seem. That from the London National, for instance, which I recorded as occurring on, roughly, 750 metres might well be the second harmonic of Droitwich. I was well aware of this possibility when I was trying out a certain set in which break-through was very pronounced. There is one way in which you can make absolutely sure during school term time. The London National is then silent until 5 p.m. One evening I tuned the set exactly to the point on the long-wave band at which the suspected break-through was occurring and left it there. The next day I switched on at a quarter to five. Not a sound was coming through. I left it running and presently there arrived the chimes of Big Ben and the opening of the programme sent from the London National. To make quite sure I had another set in operation simultaneously and tuned to the London National. As the suspected receiver reproduced at a setting near the bottom of its long-wave scale exactly what came from the other, tuned direct to the London National, there was no doubt at all that break-through was occurring.

Break-through is a phenomenon which has been common knowledge ever since the B.B.C.'s Regional scheme for a system of high-powered medium-wave stations came into being. It has nothing to do with harmonics or with any of those queer forms of "beat" reception that you can get with the not-too-well-designed superhet. You may find it, in fact you will unless you take precautions against it, in a straight set with simple tuning arrangements or even in a crystal receiver. It is very easily remedied and that is why I am so surprised to find it occurring in more than one of the sets that I have tried out this season. One can only imagine that the designers were satisfied with tests made at some distance from medium Regional and National stations. Or perhaps it did not occur to them to explore after dark the lower end of the long-wave range.

The Way They Have

A READER stationed in Palestine sends me an interesting, if rather heart-breaking, account of the way in which some of our wireless firms do—or don't do—business abroad. Recently, he tells me, he ordered two stock items from different firms. They were small things which could easily have been sent straight away by parcels post. Actually the first gadget took two months to reach him, whilst the second still hadn't turned up at the time of writing, though three and a half months had elapsed. Though the mail takes seven or eight days to reach Palestine from this country, catalogues when asked for often don't turn up for several weeks. The prize incident was that concerning a firm which forwarded his

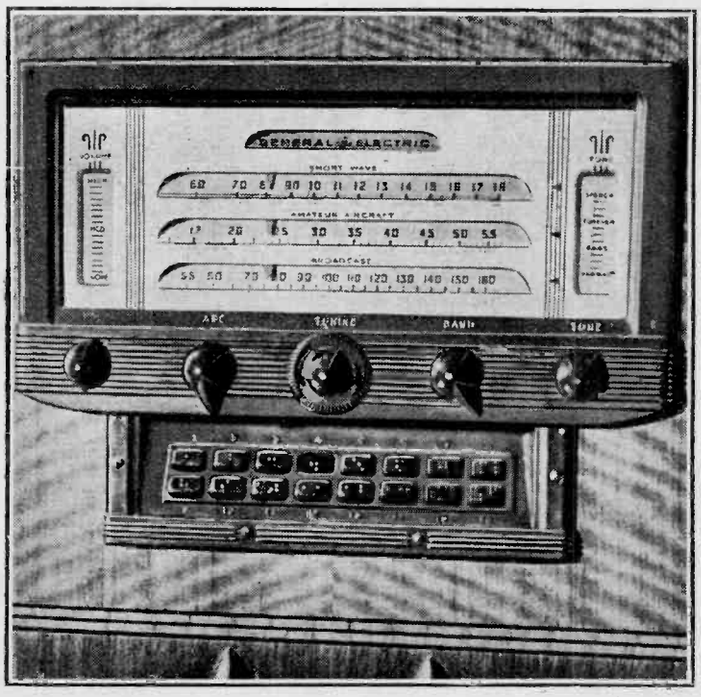

TOUCH TUNING, as it is now called, figures in this American set for the blind. The keys through which the push-button tuning system is operated are marked in Braille characters.

letter asking for a catalogue on to its Palestine agents. These delivered a catalogue right enough to my correspondent, but it was two years old. It is sad to learn that in a country so comparatively close as Palestine wireless goods ordered are generally much more quickly received from America than from this country. Isn't it just about time that our people woke up to the fact that they can't hope to develop or even to retain overseas trade if they don't take more trouble over it?

What of the Relays?

THOUGH I had heard some time before of the revolutionary steps which the Post Office authorities had in mind for the relay services, I could hardly believe that the accounts that had come my way were true until I saw the facts in cold print. And even now I can scarcely think that the full scheme will be put through. Relays are all very well in places which are badly served by the home stations or where man-made interference is so severe that direct reception is impossible without an accompaniment of unpleasant noises. Were they gradually extended to cover the greater part of the country there is no doubt that a considerable proportion of listeners would be attracted by what they have to offer. Some people, indeed, speak of a time not far distant when everyone will subscribe to the relays and the only apparatus in the house will be the loud speaker. But I can hardly see it coming to that. A choice of four programmes—and you needn't do much guessing to form an idea of the kind of programmes they'll be—won't appeal to everyone.

Freedom of Choice

After all, when you have a set of your own you are free to make your own choice; you are not tied down to what the authorities consider good for you! Admittedly most people obtain the bulk of their wireless entertainment from their local stations; but the number of those who like to be able to reach out when they want to is great, and there must be few owners of wireless sets who do not make a certain amount of use of foreign stations. The coming of the "all-wave" set has enormously increased popular interest in short-wave listening. There may be a still greater increase as time goes on if the bigger set comes into fashion. Then there is the question of personal preferences in the matter of quality of reproduction. Under a relay service you must take, I suppose, just what is given you; you cannot adjust the balance to your liking as you can with a good receiver of your own.

Einführung in die Funktechnik (introduction to Radio Technique), Verstärkung, Empfang, Sendung. (Amplification, Reception, Transmission), by Dr. Friedrich Benz. Published by Julius Springer, Vienna. R.M.15 in paper cover or R.M.16.80 bound.

THIS book is intended for the mathematically minded student of radio technique and the first section commences with descriptions of batteries, DC and AC circuits, followed by an account of the use of the j operator. Oscillating circuits and transformers are discussed followed by a short mathematical treatise on coupled circuits, networks and filters.

Waves in free space and in lines and the processes involved in modulation are discussed. The questions of constructional materials and insulators are dealt with.

The second section of the book deals with valves, including gas-filled tubes, cathode-ray tubes, electron multipliers and photo-cells.

The third section is devoted to low-frequency amplification, electro-acoustics, power amplifiers, etc.; loud speakers and microphones are also discussed in this section.

The fourth section deals with receivers for commercial telegraph operation as well as those for broadcast reception. Detection by diodes and triodes is discussed and the subject of aerials is enlarged upon. Reaction is discussed, and so are the important questions of sensitivity, selectivity and quality of reproduction. All types of receivers are dealt with, together with the questions of mains supplies and gramophone reproduction. Short and ultra-short wave circuits receive attention and discussions on faults and disturbances are included.

The fifth section deals with transmitters of all kinds and for use on all wave bands, together with the various types of frequency control. Magnetrons and Barkhausen-Kurz circuits are mentioned.

Directional aerial systems are treated, together with high-frequency feeders.

This book, which is the result of ten years' compilation of notes by the head of the teaching and research section of a college of radio technique in Vienna, should be of great value to students with a knowledge of German. It is not intended for engineers, and is, indeed, not sufficiently up to date for their needs. The portions of the book dealing with photo-cells, gas-filled relays, cathode-ray tubes and ultra-short wave circuits are particularly deficient in these respects. These latter remarks are, however, not intended as a serious criticism upon a book which is in every way excellent for the purpose for which it is written. O. S. P.

News from the Clubs

Bradford Radio Society

Headquarters: Cambridge House, 66, Little Horton Street, Bradford.
Meetings: Tuesdays at 8 p.m.
Hon. Sec.: Mr. S. Hartley, 7, Blakehill Avenue, Fagley, Bradford.

On January 18th Imperial Airways will give a lantern lecture entitled "The Empire Link," to which the public are invited.

The Robert Blair Radio Society

Headquarters: Islington Men's Evening Institute, Blundell Street, London, N.7.
Meetings: Wednesdays at 8 p.m. (Practical.) Thursdays at 8 p.m. (Theoretical.)
Hon. Sec.: Mr. A. R. Richardson, 24, Mercers Road, Holloway, London, N.19.

The members of the wireless class, which has been held for some years past at the Robert Blair L.C.C. Islington Institute under Mr. E. W. A. de Kretser, have formed themselves into a club. The annual expense to members is to be kept within the reach of everybody and is actually 6s. 9d. per annum, which works out at less than 2d. per week. The club possesses a high-quality 6-watt amplifier. The first meeting will be held on January 12th.

Tottenham Short-wave Club

Headquarters: At the rear of 64, Morley Avenue, Edmonton, London, N.18.
Meetings: Mondays, Wednesdays and Fridays at 7.30 p.m.
Hon. Sec.: Mr. E. Jones, 60, Walmer Terrace, Firs Lane, Palmers Green, London, N.13.

This Club, which has been in existence for three years, has recently moved to larger premises. A full programme will be compiled very shortly.

McCARTHY

6-valve all-wave Superhet with Radio Frequency Stage

8 stages.
8 tuned circuits.
3 wavebands.

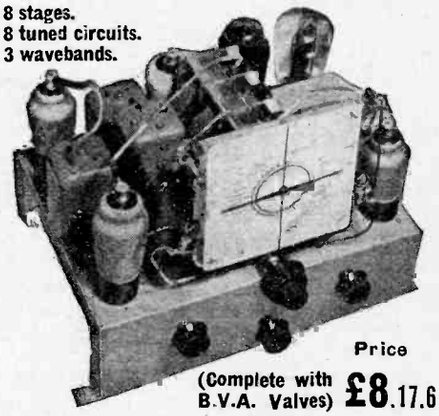

Price (Complete with B.V.A. Valves) £8.17.6

Performance (made possible by use of multi-electrode valves) equal to that of many receivers employing 8 valves or more. Brief specification includes: Large "Airplane" dial, with different coloured lights automatically switched on for each wave-range. Micro-vernier 2-speed drive. 4-point wave-change and gramophone switch. Volume control and variable tone control also operative on gramophone. Reinforced heavy-gauge steel chassis. Covers 19–2,000 metres.
Circuit comprises Preselector circuit, radio frequency amplifier (operative on all 3 wavebands), triode-hexode frequency changer, double band-pass I.F.T. coupled I.F. amplifier, double diode-triode detector and L.F. amplifier. D.A.V.C. applied to 3 preceding valves. 3-watt pentode output.

9 VALVE FOUR-WAVE SUPERHET DE LUXE

14 GNS.

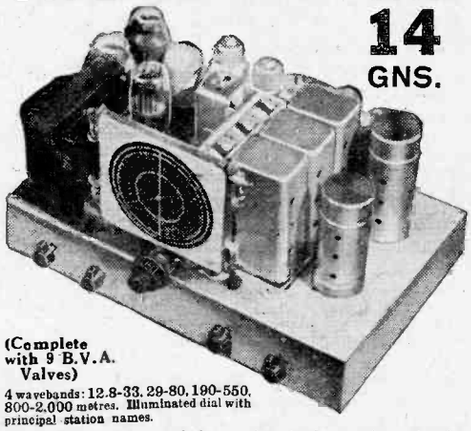

(Complete with 9 B.V.A. Valves)

4 wavebands: 12.8-33, 29-80, 190-550, 800-2,000 metres. Illuminated dial with principal station names.

Controls.—A feature of the receiver is the number of independent controls fitted, making it extremely interesting to operate. These include sensitivity control (varying bias on R/F stage), or Q.A.V.C. with manual muting control for inter-station noise suppression. 5 position wave-change and gramophone switch. Progressive variable tone control operative on radio and gram.

Circuit in Brief.—Aerial input to pre-selector circuit, radio frequency amplifier, latest type triode-hexode frequency changer, 2 band-pass I.F.T. coupled I.F. amplifiers, double diode detector, triode L.F. amplifier, separate triode phase-changer capacity coupled to 2 large pentodes in push-pull. Heavy 16-gauge steel chassis. Finest components and workmanship throughout. Harries tetrodes in place of output pentodes if desired.

STANDARD MODEL 12 GNS. As above, but with triode push-pull output, and fewer controls fitted

DEFERRED TERMS on application or through our City Agents
LONDON RADIO SUPPLIES LTD.
11, OAT LANE, E.C.2
Demonstrations Daily.

All McCarthy receivers supplied complete with valves, knobs, pilot lamp, leads, mains cable and plug. 12 months' guarantee. (Valves 3 months.)

Complete illustrated catalogue, with technical data and circuit diagrams, on receipt of 3d. in stamps, or abridged list of McCarthy chassis types free of charge.

McCARTHY RADIO LTD.
44a, Westbourne Grove, London, W.2
Telephone: Bayswater 3201/2

Letters to the Editor

The Editor does not hold himself responsible for the opinions of his correspondents

Television

IN reply to the criticisms by Mr. West of my letter on television, which was published in the issue of December 2nd.

Personally, when I am listening to an ordinary programme of light music, such as fills up the greater part of sound broadcasting time, I feel little or no inclination to watch the musicians at their work. Of course, in the case of, say, a promenade concert, I would like to have a view of the scene in the auditorium, but even then, once the concert had started, my concern would be entirely with the music. In fact, I consider that one's illusions are often shattered by the antics of the conductor, necessary though such antics may be. It is the same with a gramophone. When listening to this instrument I experience no desire to observe the working of the electric or spring motor. Musicians and motor alike are a means to an end!

Regarding the size of an average television screen, your correspondent is surely not serious when he suggests that most viewers are content with things as they are? As for the cost of valves, whether in sound or television receivers, Mr. West can hardly deny that their cost is higher than it should be. If valves were not the expensive things they are most receivers (I am speaking of "sound" sets) to-day would use more than five or six valves, which at present prices is the average number in all but "luxury" instruments.

When I hear of self-contained, battery-operated, frame-aerial television receivers, I shall consider Mr. West's final criticism to be fully justified. Not before!

T. J. E. WARBURTON.

East Molesey.

I HAVE been very interested in the discussion on the subject of television, but up to now I have refrained from adding to what has already been said on the grounds that, as one interested in the technical development of vision reception, I might be charged with being biased. After having read some of the more recent contributions on this very important subject I have felt that at least some of the views which have been advanced are not based upon long and practical experience.

In my own home I have had a television receiver in operation since the inauguration of the first regular programme, which takes us back to the summer of 1936. The psychological results are exceptionally interesting. If there is anyone in the lounge the receiver is always switched on whenever a programme is in progress. It is regularly observed in ordinary room lighting, and those items which are not of interest are simply disregarded. Experience shows that television reception is becoming a part of everyday life. It is not regarded as an entertainment, and chairs are not drawn into a circle to sit round the screen and imagine one's self at a place of entertainment. That this should be so may shock the purists who seem to wish us to be very intellectual in our viewing as they do in our listening.

The significant feature, however, is that for the most part ordinary broadcast radio programmes now completely fail to hold the interest. In fact, very little use is now made of them in my home. A year's experience shows that to listen to a sound broadcast by some artist with whom one is familiar produces intense irritation if the vision is switched off, because one is conscious that there is something lacking.

More important, perhaps, is the fact that my experience is not an isolated one, and every regular user of a television receiver (and by regular user I mean one who has had a year's experience of daily viewing) tells me that his experience is identical with my own.

Many of your correspondents are pessimistic, but I am completely convinced that television is the ultimate form of the domestic application of radio transmission. It requires perhaps a little breadth of view to appreciate television as some new entity, and I submit that it is fundamentally wrong to compare it with a home cinema, or, for that matter, anything else.

In conclusion, may I refer to the very vexed topic of the size of the screen? If we increase the size of the screen, in order to obtain the same optical illusion, we must observe the screen at a greater distance, provided no increase is made in the number of lines. With our present band-width, which determines our definition, the larger screen has one advantage only: it permits of greater freedom of movement of the head, which lessens the concentration and thereby tends to minimise possible fatigue.

Watford. PAUL D. TYERS.

"Viseo" Frequency

THERE is nothing really wrong with "vision frequency," but if a term to blend with "audio frequency" is required, then "visio frequency" would appear to answer the purpose admirably, and "viseo frequency" could be considered.

"Audio frequency" creates a mental impression of audible frequencies, and the corresponding word in television should be able to create a mental impression of vision frequencies, and "visio frequency" or "viseo frequency" does this.

Exeter. D'ARCY FORD.

Battery v. Mains Sets

IT is both strange and amusing the number of listeners who have allowed themselves to be humbugged into the idea that mains-operated sets and radiograms are far and away superior to battery equipment.

The other day I had occasion to buy a battery set for someone, and I was fairly amazed at the ignorance displayed by salesmen of these receivers. Several second-hand sets gave poor reproduction, and I was astonished when the seller remarked, "Well, but that is very good for a battery set!" This is typical of the attitude of the many salesmen, who ought to know better.

Personally, I prefer a good battery set for radio or for the reproduction of records *every time*.

This is no idle tale, and here I would say that I am out for quality exclusively.

Mains-operated sets take the palm for cheapness of operation and power, but here, with the exception of a few very expensive contrivances, their qualifications end.

Battery sets, built by constructors who have faith in their job, can hold the field for quality of reproduction, although the renewal of batteries admittedly is a snag.

As an organist I am keen on the reproduction of classical church organ recordings, and, after several years, have found that a good Class A battery equipment gives a realism I have failed to experience with any

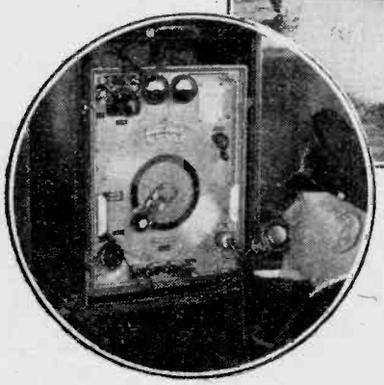

RADIOTELEPHONES have been installed on Germany's fleet of fast river police boats which patrol her waterways and lakes. The Telefunken equipment consists of a 15-watt short-wave transmitter and a 6-valve receiver, both of which are fed from a 250-watt generator run off the vessel's engine. Batteries capable of giving a 6 to 8-hour uninterrupted service can be brought into use when required. In open country the transmitter's range is about 18 miles but in built-up areas this drops to about 4 or 5 miles. The telescopic aerial, which carries a capacity ring and has a total height above the water of 14ft., can be seen on the cabin roof in the above picture, whilst on the left an operator is seen using the telephone.

but the most expensive mains radiograms.

I have electric mains at home and have compared many mains sets with their battery competitors, and I willingly put up with the small inconvenience of batteries for a really enjoyable and untiring evening.

Would that more "quality fans" could forget for a moment the claims on paper of some technicians and just—*listen*.

Hounslow. E. R. J. ROBBINS.

Valve Life

WHERE did "Diallist" pick up the idea that a valve has done well if it lasts a thousand hours? Probably from the average life claimed for electric lamps in years gone by.

The arbitrary figure of 1,000 hours was an ideal to be aimed at in the early days of the vacuum metal-filament lamp; the first successful metal filaments were made of tantalum; tungsten gave greater efficiency for lighting purposes, but the method of working it had not then been taped off; tungsten filaments were used, but they consisted of tungsten powder mixed with a binding agent and squirted through an orifice.

Like gas mantles, these filaments travelled very well, but once burnt off they were mechanically delicate, and I well remember instructions to clean the bulbs only when alight! De Forest made his first "audions" during this era, and naturally used tantalum for its mechanical strength, as it could by then be drawn like other metals; later, Coolidge worked out a method of treating tungsten so that it could be drawn in like manner, and from then on tantalum began to fade out of the picture, as it gave only about 0.6 candle-power per watt, whilst tungsten came nearer the whole number.

Nevertheless, at a temperature giving a reasonably long life, tantalum was still about four times the efficiency of tungsten when it came to emitting electrons; but when the lamp factories took to making valves in quantities, they naturally used the material to hand—tungsten—as production of tantalum had fallen so low that it was many times the price of tungsten. The gas-filled or "half-watt" lamp enabled efficiency to be increased considerably, but even now a good life for an electric bulb in ordinary service is 750 hours. When the valve began to assume a place in the scheme of things, instead of being a mere side-line in a lamp factory, more attention was paid to economical electron emission, and things began to happen! Not all valves, of course, had been of the bright-emitter type, running at a temperature of 2,600° C. or so: the Lieben-Reisz and Round valves had lime-coated platinum filaments which worked at about 500° C., but still swallowed amps., the former at 30 volts! Our present 2-volt, 0.1- or 0.2-amp. filaments likewise operate at this comparatively low temperature, but before they became truly commercialised there was an intermediate stage of tungsten filaments running at a bright yellow heat instead of white, and yet giving a much more copious supply of the necessary electrons. It had been customary to add a little thorium oxide, which had been found to add greatly to the mechanical strength of the tungsten, and more or less by accident it was found that prolonged ageing at a low temperature or a momentary flash at a very high degree rendered a given filament emissive at 2,000° C., which not only meant about half the voltage and current, or a quarter of the power, but also a much-extended, useful life. Research showed that this increased emission was due to the thoria (or was it reduced metallic thorium?) coating the surface of the filament. The Wehnelt, or lime-coated, cathode was only waiting the development of reliable commercial methods of producing the coating and making it stick really close for a long time; this has been done very well now, and, of course, we do not use expensive platinum as the heater, or, in indirectly heated valves, as the base.

We might as well note here a misuse of terms which was current at one time: the 3-V, 0.06-A valve was known as a "real" dull emitter, while the 2-V, 0.35-A DER class was called "semi-dull," purely on the basis of consumption; in actual fact, both these ran at the same "brightness," and both were semi-dull by comparison with the Round, which needed a 4-V accumulator able to keep up 3-A for a reasonable number of hours.

The temperature at which it is run is not the only deciding factor in the life of a cathode, of course, and it does not follow that there is any useful life left if it still lights up or passes current: the "death" of a valve occurs when it no longer emits sufficient electrons to fulfil its designed functions at rated values of voltage and current, and this point may be reached sooner by applying the full rated HT, as in an output or rectifying valve, than in one that will stand 250 but, by reason of resistance coupling or decoupling, is only getting, say, 150 V.

So I would say that 1,000 hours *was* a very good life for a bright emitter receiving valve run well within its rating; some transmitting valves are starred in the log-book if they reach half this; but one does not expect to have to replace modern output (receiving) valves in less than two years—say, 2,000-3,000 hours—and in earlier stages they should run a good deal longer. L. J. VOSS.

Plympton.

Rotary Converters

OUR attention has been drawn to the article appearing over the signature of "Ethacomber" in your issue of December 16th, the first part of which goes to show that, as far as his experience goes, the employment of rotary converters for use with an AC receiver working off DC mains is entirely unsatisfactory for short-wave reception.

This appears to us to be a strange statement for him to make in view of the many tests which have been officially carried out by your technical experts, also reputable radio instrument manufacturers, including the manufacturers of the set on which his experiments were carried out.

We suggest that, before reaching such a conclusion and incurring major alterations with attendant expense, he should at least have approached the manufacturers of the converter to assist him in locating his trouble which, we contend, is not inherent to the converter.

We submit that a little collaboration with the manufacturers would have given him results comparable with AC mains reception at far lower cost, and we are prepared to demonstrate this contention at any time.

E. J. TIMBERLAKE,
Director, The Electro Dynamic
St. Mary Cray. Construction Co., Ltd.

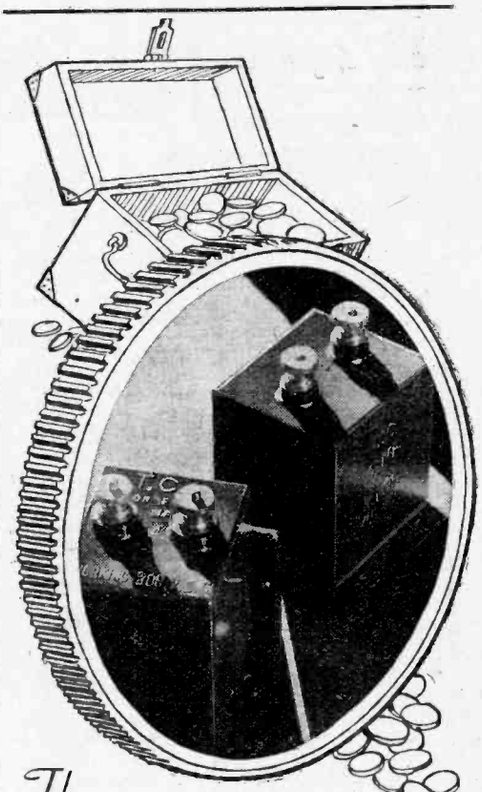

The
STAMP of
A NAME
— that stands for recognised
DEPENDABILITY

FOR over 30 years T.C.C. have specialised in the design and manufacture of the one product—condensers and condensers alone. As a result T.C.C. have brought first to the world of cables, second to Radio and now to Television a standard of dependability and which only specialisation can give. Look back over the years, almost invariably wherever a vital step forward in condenser design has been made, that step has been made by T.C.C. . . . Little wonder "T.C.C." means DEPENDABILITY.

The illustration shows two T.C.C. Paper Condensers. Left a Type 50 non-inductive 4 mfd. tested to 400 V.D.C. for 200 v. working, and right a Type 80 non-inductive 8 mfd. tested to 800 V.D.C. for 400 v. working.

T.C.C.
ALL-BRITISH
CONDENSERS

The Telegraph Condenser Co. Ltd., Wales Farm Rd., N. Acton, W.3

CA 3741

Recent Inventions

Brief descriptions of the more interesting radio devices and improvements issued as patents will be included in this section.

CATHODE-RAY "OSCILLATORS"

THE electron stream of a cathode-ray tube is caused to follow a path which represents a half period of the oscillation to be generated. Periodically the stream is automatically displaced so that it impulses the two ends of an external oscillatory circuit.

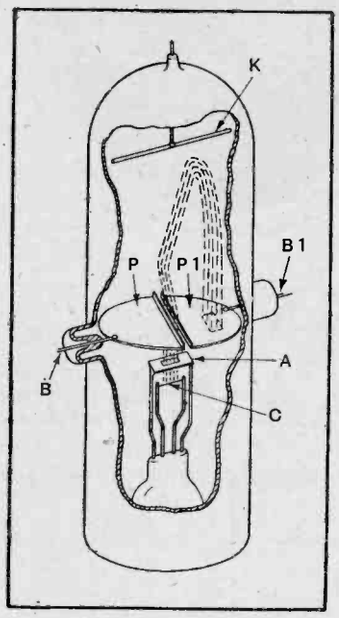

Electrode assembly in ultra-high frequency valve generator.

As shown, in the Figure, the electrons emitted from the cathode C are first passed through a narrow slot in the anode A, and then through a division between two plates P, P1, which are connected at B, B1 to the two ends of an external tuned circuit.

At the top of the tube is a negatively charged electrode K, which acts at a certain distance to repel the stream downwards. The returning stream, shown in dotted lines, will strike either one or other of the two plates P, P1. Suppose, for instance, it strikes the plate P1. The latter, as a result, acquires a negative charge, and the opposite plate P simultaneously acquires an equal and opposite positive charge. The potential gradient then automatically swings the electron stream across the gap between the two plates on to the plate P, which thereupon becomes negative. Whilst the plate P1 turns positive. This swings the beam back again, and so on indefinitely.

Farnsworth Television Inc. Convention date (U.S.A.), March 13th, 1935. No. 471250.

o o o o

TIME-BASE CIRCUITS

SCANNING oscillations of regular frequency, and with a rapid "flyback" stroke, are generated by the circuit shown. The main timing-condenser C is charged up through a resistance R and condenser C1, and is periodically discharged through a multigrid valve V, which is itself subjected to a sinusoidal bias derived from an oscillator valve V1 through a double diode D. Incoming synchronising signals are applied at Y to the sinusoidal generator V1.

The resulting bias from the diode D is applied in parallel to the control and screening grids of the valve V. The effect of the bias is to render the valve V conducting for two very brief intervals during the period of the sinusoidal oscillation generated by the valve V1. The flyback stroke is accordingly stabilised in frequency, and is also rapid and clear cut.

The saw-toothed oscillations produced by the alternate charge and discharge of the main condenser C are applied through an amplifier V2 to one of the deflecting plates P of the cathode-ray tube, the anode of the latter being connected at A to the cathode of the amplifier, as shown.

Standard Telephones and Cables, Ltd. and R. M. Barnard. Application date February 28th, 1936. No. 471185.

SCANNING OSCILLATORS

SAW-TOOTHED oscillations, suitable for use in scanning, and varying from 120 to 6,000 cycles, are produced in a single multigrid valve by secondary emission from the grid nearest the anode.

As shown, the grid G is connected through a variable resistance R to the cathode K. The next grid G1 is positively biased from a source P, whilst the third grid G2 is connected to the first grid through a condenser C, and also to a less-positive point on the biasing potentiometer P. Impulses at about the desired frequency are applied to the grid G2 from an AC generator V, and the resulting saw-toothed oscillations are drawn off at O.

The valve is of the highly-evacuated type, and is, therefore, free from the "lag" due to deionisation which is peculiar to all gas-filled discharge tubes.

H. R. Lubcke. Application date, May 25th, 1936. No. 471337.

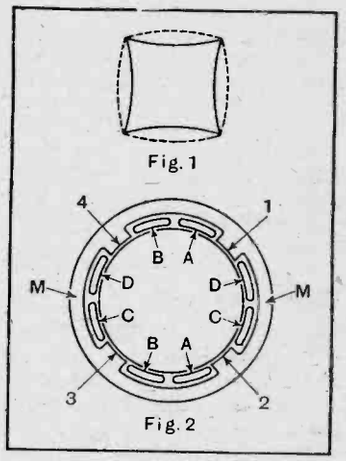

Altering the shape of the "raster" to provide a corrective curvature.

"raster"—or area swept out by the stream—instead of being truly rectangular, is bounded by a curved margin, as shown in full lines in Fig. 1, each scanning line being unduly crowded in towards the centre. The resulting effect is known as "pincushion" distortion. The object of the invention is to correct for this effect by giving the "raster" the convex shape shown in dotted lines, so that one shape offsets the other to produce a substantially rectangular outline.

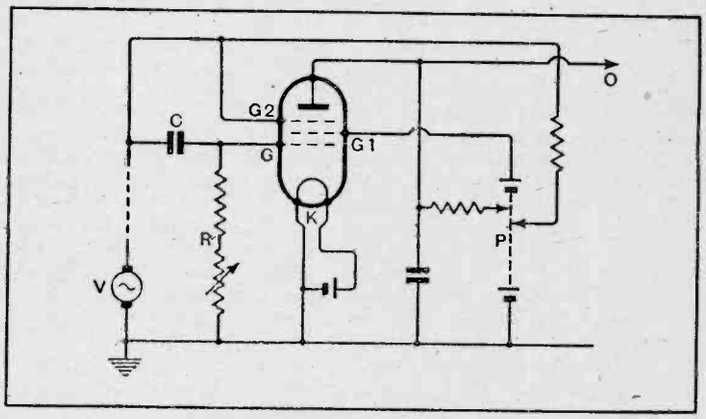

Circuit of saw-toothed oscillation generator using a single multi-grid valve.

"PINCUSHION" DISTORTION

THE curvature of the bulb of a cathode-ray tube is usually flatter than the surface of a hypothetical sphere having its centre located between the deflecting-plates for the cathode stream. For this reason, the shape of the

Fig. 2 shows the magnetic deflecting system used for this purpose. The magnetic yoke M surrounding the tube has four poles 1, 2, 3, 4, energised by four deflecting coils A, B, C, D. The framing currents pass through coils A, B, and the line-deflecting currents through coils C, D. Poles 1 and 3 are therefore energised by the sum of the frame and line currents, and poles 2 and 4 by their difference. This produces the desired correcting curvature.

M. Bowman-Manifold. Application date November 27th, 1935. No. 471103.

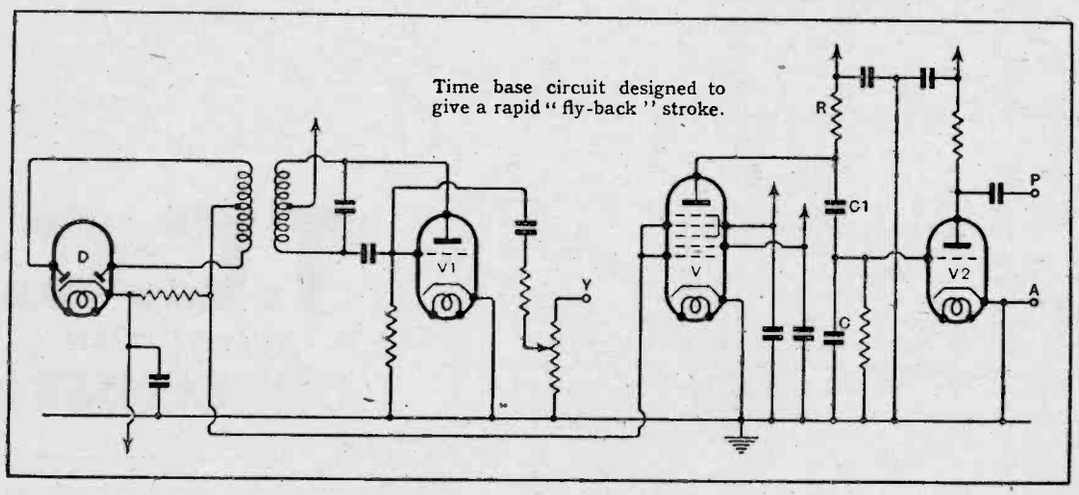

Time base circuit designed to give a rapid "fly-back" stroke.

The British abstracts published here are prepared with the permission of the controller of H.M. Stationery Office, from specifications obtainable at the Patent Office, 25, Southampton Buildings, London, W.C.2, price 1/- each. A selection of patents issued in U.S.A. is also included.

The Wireless World
THE PRACTICAL RADIO JOURNAL
27th Year of Publication

No. 959. THURSDAY, JANUARY 13TH, 1938. VOL. XLII. No. 2.

Proprietors: ILIFFE & SONS LTD.

Editor:
HUGH S. POCOCK.

Editorial,
Advertising and Publishing Offices:
DORSET HOUSE, STAMFORD STREET,
LONDON, S.E.1.

Telephone: Waterloo 3333 (50 lines).
Telegrams: "Ethaworld, Sedist, London."

COVENTRY: Hertford Street.
Telegrams: "Autocar, Coventry." Telephone: 5210 Coventry.

BIRMINGHAM:
Guildhall Buildings, Navigation Street, 2.
Telegrams: "Autopress, Birmingham." Telephone: 2971 Midland (4 lines).

MANCHESTER: 260, Deansgate, 3.
Telegrams: "Iliffe, Manchester." Telephone: Blackfriars 4412 (4 lines).

GLASGOW: 26B, Renfield Street, C.2.
Telegrams: "Iliffe, Glasgow." Telephone: Central 4857.

PUBLISHED WEEKLY. ENTERED AS SECOND CLASS MATTER AT NEW YORK, N.Y.

Subscription Rates:
Home, £1 1s. 8d.; Canada, £1 1s. 8d.; other countries, £1 3s. 10d. per annum.

As many of the circuits and apparatus described in these pages are covered by patents, readers are advised, before making use of them, to satisfy themselves that they would not be infringing patents.

CONTENTS

	Page
Editorial Comment	23
How a Receiver is Designed—II	24
Notes on the Contrast Expansion Unit	27
Reducing Receiver Noise	28
Unbiased	30
Diversity Reception	31
The Physical Society's Exhibition	35
News of the Week	38
Readers' Problems	41
Random Radiations	42
Letters to the Editor	44
Recent Inventions	46

EDITORIAL COMMENT

International Broadcasts

Use of Foreign Languages

THE year 1938, young as it is, has already proved eventful in the history of broadcasting in foreign languages. The B.B.C. transmissions in Arabic have attracted world-wide attention, whilst almost simultaneously the French Government has apparently decided to act upon the representations of the British Foreign Office and curtail the activities of English broadcasts in France.

For years certain stations in France have been directing their programmes to English listeners in this country. It will be remembered that since quite early days in broadcasting efforts have been made to get international agreement which would have as its object the elimination of broadcast propaganda directed from one country to another and made in a language other than that of the country of origin.

At one time we believe that France and Russia, shortly afterwards followed by Luxembourg, were the only countries transmitting programmes in foreign languages and directed to listeners abroad. It was because this country hoped that agreement would ultimately be reached to suppress broadcasting of this nature that the use of the Empire broadcasting station for transmissions even in languages spoken within the British Empire was held up. When, however, it was found that there could be no prospect of international agreement, then foreign broadcasts in languages spoken within the British Empire were regarded as desirable, and a start has been made with the Arabic transmissions.

It is curious that the French Government's action to curtail the activities of stations in France conducting broadcasts in English should be taken just at a time when the Empire programmes are being developed on these new lines.

The fact that some of these transmissions from France are paid for by advertisers whilst broadcast advertising is prohibited in the B.B.C. programmes has been regarded by many people as the reason why efforts are being made to stop them.

The advertising may be an additional cause for objection but it is certainly not the principal or official reason for the protests to the French Government.

The Broad Principle

Many statements have appeared in the Press recently suggesting that the B.B.C. is responsible for originating the efforts to restrict the work of these French stations. We do not think that this is really correct. It is the British Government itself which has expressed disapproval of the principle of stations being set up in one country to broadcast to another, especially under conditions where such stations would not be licensed in the country to which their transmissions are directed.

It cannot be regarded as tolerable that an activity, illegal in one country, should still be carried on unchecked just because the operating parties have moved across a frontier. Contrary to many reports, there is nothing inconsistent in the fact that the Government is, on the one hand, encouraging the use of various languages on the Empire transmissions, and at the same time maintaining opposition to the use of stations in France and elsewhere for the transmission of programmes in English directed to listeners in this country. The two views are not in conflict and do not indicate any contradiction in policy.

How a Receiver is Designed.—II.

THE DETECTOR AND TUNING SYSTEM

THE output stage was treated in detail in Part I of this series of articles and here the detector, tuning system and mains equipment are discussed. It is shown that while the ordinary single-circuit tuner is not selective enough the two-circuit tuner is not efficient enough. The difficulty is overcome by a special single-circuit arrangement.

WE must now turn to the detector, for which we have one valve available. There is really no alternative to the grid detector, and the main point to be decided is the type of valve to use. The pentode can be made to function well, but is much more critical in its operating conditions than the triode. In addition, it will not, in practice, lead to appreciably higher stage gain if the same frequency response is maintained.

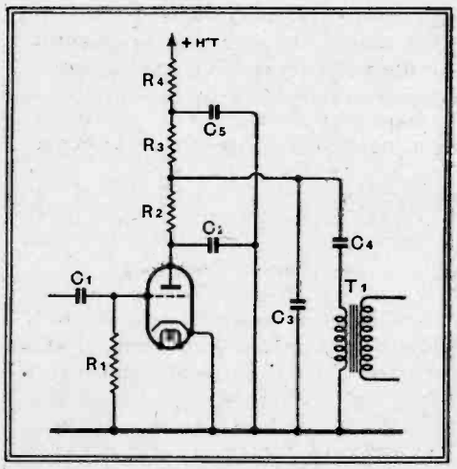

Fig. 3.—The basic detector circuit and its coupling to the output valve are shown here.

We thus choose the triode, and the Mazda HL1320 is a suitable type. This valve has an AC resistance of 10,000 ohms with an amplification factor of 30, and the basic detector circuit is of the form shown in Fig. 3. Here R1 and C1 are the grid leak and condenser, and are essential to proper detection. They may be connected as shown, or R1 may be joined in parallel with C1. The capacity of C1 must be large enough to allow the input RF signal to reach the grid of the valve with but little loss. The value of R1 must be high enough to prevent the input tuned circuit (not shown) from being too heavily damped. In addition, the product C1 R1 must be as small as possible if the higher musical frequencies are not to be attenuated.

The requirements are conflicting, and the best compromise is usually reached with R1 of 0.25 megohm and C1 of 0.0001 μF. The use of a larger value for either will give somewhat increased efficiency and a poorer frequency response, while the converse is true of smaller values. Actually, quite large changes in the values can be made with very little audible effect.

Detection occurs in the grid circuit, with the result that an audio-frequency voltage appears on the grid as well as the RF signal. These voltages cause anode current fluctuations which, in turn, cause voltage variations across the anode circuit impedance. Now the voltage thus appearing in the anode circuit depends on the impedance of the circuit, and this depends on frequency.

The Detector Output Circuit

The chief frequencies involved are the radio-frequency and the range of audio-frequencies. These are widely different in value, with the result that certain components in Fig. 3 can be roughly regarded as ineffective to the one but active for the other.

When no reaction is used we want as little RF voltage developed on the anode as possible, so we make C2 as large as we can while keeping its reactance at the high audio-frequencies large compared with the other circuit impedances. This usually leads to a value of some 0.002 μF. for this condenser.

Now R2 and C3 constitute a simple filter to prevent any RF voltages developed on the anode from passing any farther along the circuit. The higher the values of the components the better is the filtering action, but the greater is the tendency for high audio-frequencies to be attenuated. In addition, a high value of R2 causes a lowering of the amplification. This can be avoided, however, by using an RF choke in its place, but this is more expensive. In practice, good results are secured with some 5,000-10,000 ohms for R2 and 0.0005 μF. for C3.

When reaction is used, some RF voltage must be developed on the anode in order to obtain reaction effects. C2 is then reduced to about 0.0002 μF., or even omitted, and C3 can often be increased to 0.001 μF.

Now R3 and C4 would be unnecessary if it were permissible to pass the steady anode current of the valve through the transformer primary. With most modern transformers, however, no direct current can be allowed through the windings, and R3 and C4 are included to filter out this current. The direct current passes through R3, and C4 prevents it from going through the transformer primary.

The signal voltages appear across R3 and are applied to the transformer primary through C4, practically the full voltage appearing on the primary. The secondary voltage, which is applied to the following valve, is equal to the primary voltage multiplied by the step-up ratio of the transformer.

Neglecting C4 for the moment, the bass response depends on the primary having sufficient inductance in relation to the circuit resistances. For a negligible drop in response at 50 c/s the inductance should not be less than about R/200 where R is the effective resistance. It is equal to R3 in parallel with the sum of the valve AC resistance and R2.

In practice, the inductance cannot be changed easily, so that it is more usual to take a suitable type of transformer and choose the resistance to suit it. A good transformer has a primary inductance of the order of 80 H., so that R should be about 16,000 ohms. Now the valve resistance is about 10,000 ohms, and if R2 is 10,000 ohms also, R3 must be 80,000 ohms to give a total of 16,000 ohms effective circuit resistance.

This would be quite suitable for an amplifier stage, but is too high for a detector, since if proper reaction effects are to be secured the anode voltage must not be too low. A value of 40,000 ohms is usually reckoned to be the highest suitable value for a detector, and this makes the effective circuit resistance lower than

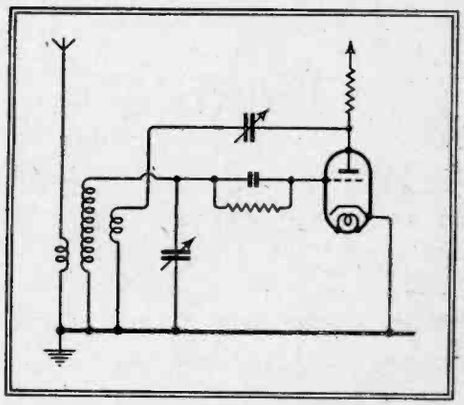

Fig. 4.—The simplest form of single-circuit tuner does not give enough selectivity for most purposes.

How a Receiver is Designed—

necessary. There is, however, no disadvantage in this.

The value of the condenser C4 can be chosen in two ways: it can be made very large so that its effect is negligible, or it can be chosen to resonate with the primary inductance at a low frequency. In this case it tends to improve the bass response, and we shall do it here and select the transformer maker's recommended value of 0.5 μF. A value smaller than this should not be used, since it will tend to give a resonance peak in the bass, but there is normally little objection to a higher capacity.

The Decoupling Circuit

The components R4 and C5 have not yet been mentioned. These provide decoupling, that is, they prevent any AC voltages in the HT supply circuits from affecting the operation. Consequently, in addition to providing freedom from motorboating troubles, they give a very considerable amount of smoothing.

The values are by no means critical. In general, R4 should be as high as possible without causing an excessive voltage drop and C5 should also be large. It is very difficult to calculate the values necessary, but experience shows that 10,000-20,000 ohms is suitable for R4 in this case and C5 should be 4 μF. or more. There is hardly ever any objection to using a larger value of decoupling capacity than that specified.

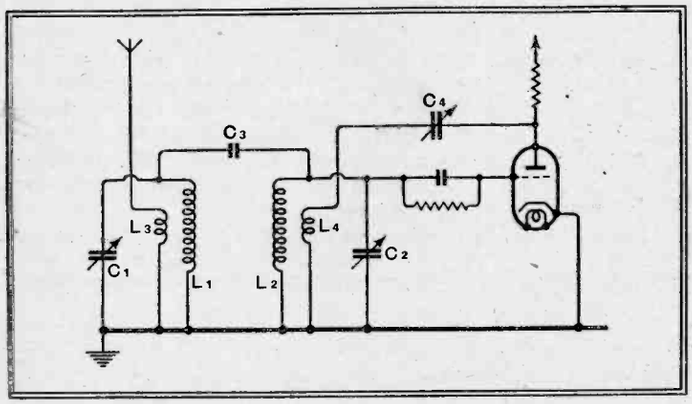

We have now to consider the tuning system. It is customary in a receiver of this nature to use a single tuned circuit somewhat on the lines shown in Fig. 4, and an arrangement of this nature is efficient and simple. It is not, however, selective enough for modern broadcasting conditions, for it is often difficult to obtain complete separation of the two locals with it.

In an effort to secure higher selectivity a pair of coupled circuits, arranged in a way similar to that shown in Fig. 5, is sometimes adopted. Here there are two tuned circuits, L1 C1 and L2 C2, loosely coupled together by the "top-end" capacity C3. The aerial is coupled to the primary circuit by the coil L3, and reaction is obtained by the coil L4 coupled to the secondary and is controlled by C4.

The efficiency of this arrangement cannot be greater than 50 per cent. of that of Fig. 4, but it is undoubtedly a more selective system. In practice, the efficiency is usually a good bit lower than the 50 per cent. figure, for reaction is not nearly as effective applied to a pair of coupled circuits as it is when only one circuit is involved. In addition, ganging errors come in and further reduce the efficiency, and much more apparatus is needed than with a single circuit.

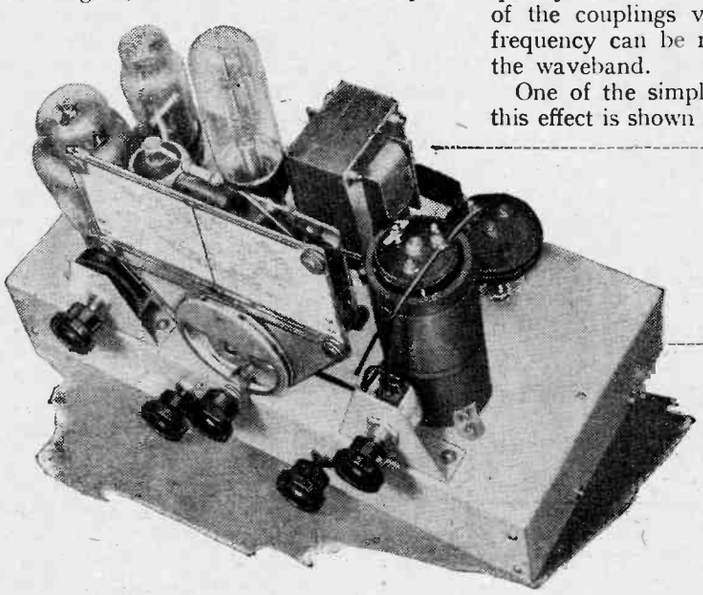

A view of the finished receiver showing the tuning coils.

Let us, therefore, go back to the original circuit of Fig. 4 and see if we can improve it without sacrificing efficiency to selectivity to an excessive degree. Now experience shows that for anything but the local stations a considerable degree of reaction has to be used, and the circuit then becomes quite sharply tuned. Because of this, and aided by an effect in the detector known as "the demodulation of a weak signal by a stronger," quite a large number of stations can be received without interference from their neighbours. It is the local stations which prove troublesome, and one method of reducing their interference is to fit wavetraps. In general, however, a wavetrap is not a very satisfactory remedy, although it can be useful on occasion. To be effective, a wavetrap must incorporate a very efficient coil and condenser, and these are usually expensive.

Fig. 5.—The two-circuit tuner is more selective, but is not very efficient.

There is, however, an old trick which has been rather forgotten of recent years but which is very effective. The writer used it with great success as far back as 1922! It consists of coupling the aerial to the tuned circuit in two different ways and arranging for one coupling to oppose the other. Apart from resistance losses, at one frequency the two couplings are exactly equal and a station at this frequency is then cut out. By making one of the couplings variable, this rejection frequency can be moved to any part of the waveband.

One of the simplest ways of obtaining this effect is shown in Fig. 6, which is the same as Fig. 4, save for the addition of C2. The tuned circuit is L1 C1, and reaction is provided by L3 C3. The aerial is coupled to the tuned circuit partly by the mutual inductance between L2 and L1 and partly by the condenser C2, which must be of very small capacity.

The two couplings oppose one another. The effective coupling by mutual inductance decreases with frequency, while that by capacity increases with frequency. At one particular frequency the couplings are equal and their total is zero. At all other frequencies the couplings are unequal, and the total is their difference.

The Aerial Coupling

Various circuit losses prevent complete rejection of the local from being secured in all cases, but it is usually possible to reduce it so that it is only just audible *with the receiver tuned to it*. When L1 C1 is mistuned from it for the reception of another station, its inherent selectivity comes into play and the local becomes inaudible.

The effective coupling at frequencies close to that of the rejection frequency is naturally very loose, and there is consequently a loss of signal strength. With correct design, however, this is not as

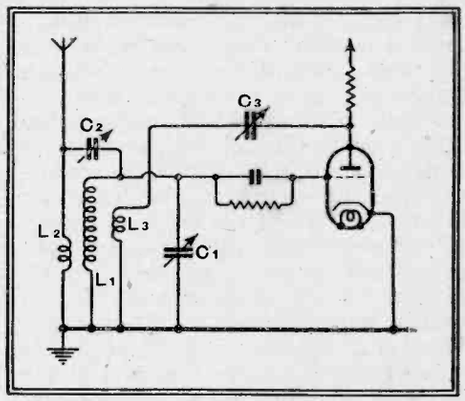

Fig. 6.—A single-circuit tuner with which good selectivity can be secured is shown here. The condenser C2 enables an interfering signal to be balanced out.

How a Receiver is Designed—

great as one might expect, and a better all-round performance is secured than is obtainable with other methods.

For a given value of mutual inductance between L1 and L2, we can use a small coil for L1 tightly coupled to L2, or a large coil loosely coupled. The larger the value of L2, the greater the signal voltage developed across it and hence the smaller the value of capacity needed at C2 to provide the necessary capacity coupling. Now, variations in the value of C2 necessarily affect the setting of the tuning condenser C1, but the effect gets smaller the smaller the value of C2. It pays, therefore, to use a large coil for L2, loosely coupled to L1, and to adopt a small capacity for C2.

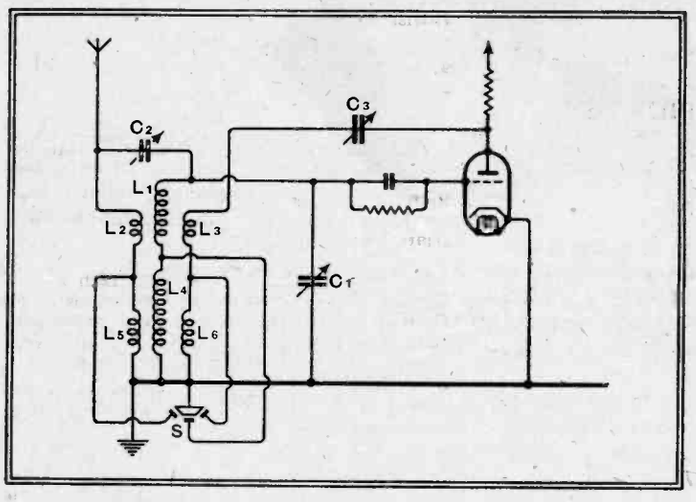

Fig. 7.—The circuit of Fig. 6 is shown here with coils for two wavebands and the necessary switching.

For the reaction circuit, however, the best results are secured with a small coil L3 very tightly coupled to L1, and a large capacity C3 for controlling it.

Waveband switching is most easily arranged by connecting the medium- and long-wave coils in series with one another, and short-circuiting the long-wave coils on the medium waveband. The circuit then becomes as shown in Fig. 7.

The Complete Circuit

We are now in a position to put together the various pieces of apparatus which we have discussed and we get the almost complete circuit of Fig. 8. The tuning system here is the same as that of Fig. 7 save that the differential type of reaction condenser is shown; this is advisable since it provides a by-pass condenser between the detector anode and cathode when reaction is at minimum. The condensers C4 and C5 in the aerial and earth leads respectively are included merely to isolate the aerial and earth from the mains, for with an AC/DC set the whole of the receiver circuits are live to the mains. The capacities are by no means critical and C4 can be 0.001 μF. or more, while C5 can be about 0.01 μF.

The intervalve coupling system is the same as that shown in Fig. 3, and the output stage is that of Fig. 2, save for the insertion of R6. This resistance is included to prevent the valve from oscillating at a very high frequency determined by the stray wiring capacities and inductances. Its value is not critical and 50 ohms is suitable; it should not be greater than about 100 ohms, otherwise the power output will be affected to some extent.

There now remains the question of the power supply to consider. For the HT supply in an AC/DC set we need smoothing equipment and a half-wave rectifier. With large capacity condensers a single choke is sufficient and this part of the circuit takes the form shown in Fig. 9. On DC mains C2 has little effect, but on AC it has a large effect on the efficiency of rectification and upon the amount of ripple at the input of the smoothing equipment Ch and C1. The larger the capacity of the reservoir condenser C2, the greater the output of the rectifier and the less the ripple. Too large a capacity, however, tends to reduce the life of the rectifier valve. A capacity of the order of 8 μF. is a good compromise between the conflicting factors, but larger capacities are often used.

The choke Ch should have as high an inductance and as low a DC resistance as possible. The higher the inductance the better the smoothing, and the lower the resistance the smaller the loss of HT volts in the choke. The inductance depends on the direct current through the choke and falls with increasing current; the greater the inductance, the lower the resistance, and the heavier the current, the more expensive does the choke become. Again a compromise is necessary, and a component with an inductance of 20 H. at 60 mA. and a DC resistance of 450 ohms is quite suitable.

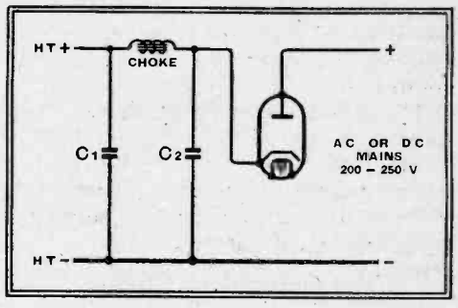

Fig. 9.—The mains equipment for the HT supply to an AC/DC set is of very simple nature, as can be seen from this diagram.

The condenser C1 is important for smoothing, and the smoothing increases with the capacity; 8 μF. is again a common value and with a suitable choke is normally sufficient. To some extent the use of a low inductance choke can be corrected by increasing the value of C1.

Heater-Current Regulation

We are now left with the heater supply. We are choosing valves consuming 0.2 ampere, and have selected the Mazda HL1320 and Pen 3520 for the receiver, and a suitable rectifier is the U4020 of the same make. These valves will have their heaters connected in series, so that the total voltage across the three will be the sum of their individual voltages, or 13 + 35 + 40 = 88 volts. On 200-volt mains we have an additional 112 volts to drop, and on 250-volt mains 162 volts. A series resistance with tappings for different mains voltages can be used, but is not very convenient, since it must dissipate about 32 watts and is usually quite large.

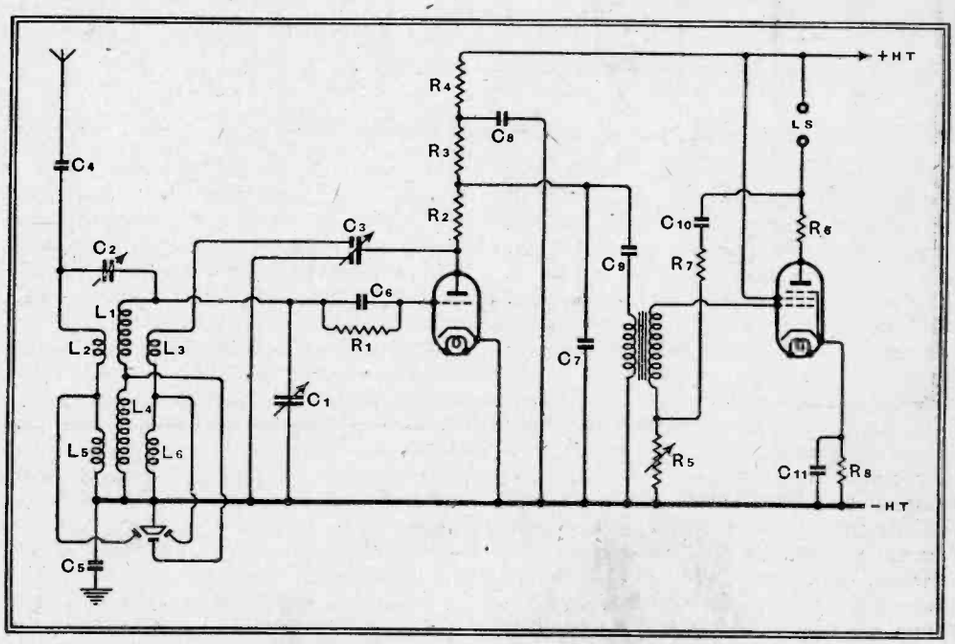

Fig. 8.—The circuit of the complete receiver as so far discussed is shown here. It is easy to see that it is a combination of Figs. 2, 3 and 7.

How a Receiver is Designed—

A barretter is more convenient, since it is smaller and affords automatic regulation of the current. No change is needed for different mains voltages and it corrects for mains voltage fluctuations. We require a barretter effective over the range 112-162 volts at 0.2 amp. and *The Wireless World* Valve Data Supplement shows that the Philips C1 is suitable, since its control range is 90-230 volts.

The circuit of this portion of the equipment is shown in Fig. 10, and Figs. 8, 9 and 10 put together give the complete circuit diagram. The order in which the valve heaters are wired has a bearing on the question of mains hum, and it is generally found that the quietest operation is obtained with the detector wired at the negative end of the chain and the rectifier at the positive as shown.

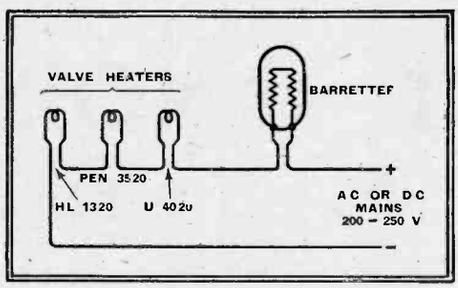

Fig. 10.—The valve heaters are best supplied from the mains with the aid of a barretter.

Notes on the Contrast Expansion Unit

MODIFICATIONS FOR A PIEZO-ELECTRIC PICK-UP

IT was mentioned in the article describing the construction of this unit in the issue of December 9th that it was best suited for use with gramophone pick-ups of the magnetic type and especially those giving a comparatively small output.

It was, therefore, decided to fit a step-up transformer after the MH4 valve so that the D41 rectifier would be able to provide the DC volts required for satisfactory control of the MX40 valve.

resistance should also be included in the anode circuit. The 0.02 mfd. condenser was included in the original unit.

A piezo-electric pick-up will not operate satisfactorily with a shunted volume control of 50,000 ohms, and when this kind is employed the input circuit of the expander will have to be slightly modified also.

The alterations required here are shown on the revised circuit diagram, from which

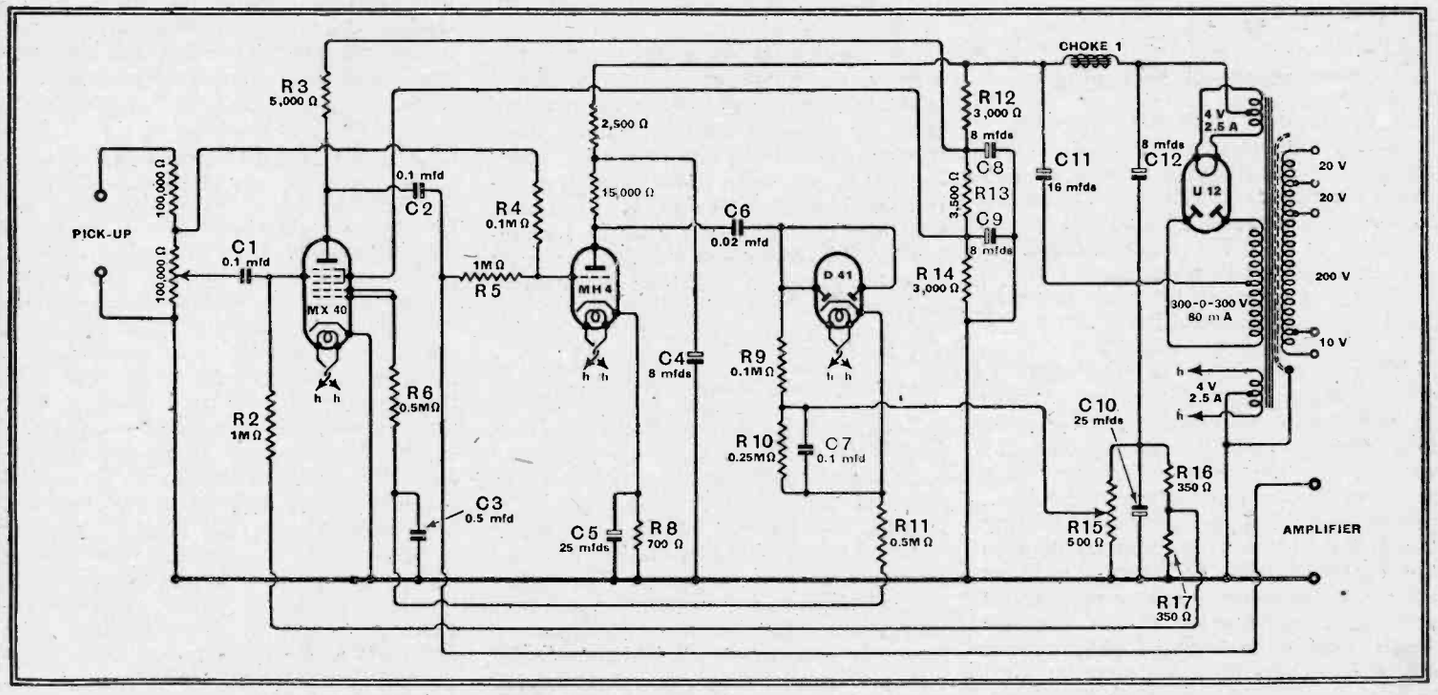

Modified circuit of the Contrast Expansion Unit for use with a piezo electric gramophone pick-up.

With a pick-up giving a much larger output than the amount stated it would be advisable to modify this portion of the circuit and replace the transformer by a resistance-capacity coupling, the suggested values for the components being 15,000 ohms anode resistance and 0.02 mfd. coupling condenser. A 2,500 ohms decoupling

it will be seen that two 100,000-ohm resistances now replace the original 50,000 ohms. One of these resistances is fixed, while the other is variable, and acts as a volume control.

The input to the DC rectifier portion of the expander is taken from the junction of these two resistances.

Television Programmes

THURSDAY, JANUARY 13th.

3, O.B. from the Chiswick Works of the London Passenger Transport Board. **3.20,** Gaumont-British News. **3.30,** Excerpts from the revue "Members Only."

9, Marcelle Salzer in songs. **9.5,** British Movietonews. **9.15,** "Dr. Knock"; adapted from the comedy by Jules Romains.

FRIDAY, JANUARY 14th.

3, O.B. from the L.P.T.B. Works at Chiswick. **3.15,** Preview. **3.20,** British Movietonews. **3.30,** "The Billiard Room Mystery," adapted from Stephen Leacock's story.

9, "Rush Hour," a revue, by Herbert Farjeon, with music by Walter Leigh. **9.50,** Gaumont-British News.

SATURDAY, JANUARY 15th.

3, Lupino Lane and Teddie St. Denis in scenes from "Me and My Girl," with supporting cast. **3.15,** Mr. C. H. Middleton. **3.25,** Gaumont-British News. **3.35,** Cabaret.

9, Gillie Potter. **9.10,** British Movietonews. **9.20,** Variety, including Jeanne de Casalis and Tommy Handley.

MONDAY, JANUARY 17th.

3, Les Allen and his two pianists. **3.5,** Gaumont-British News. **3.15,** "Dr. Knock," a comedy.

9, Starlight. **9.20,** "The Duchess of Malfi," a play by John Webster, first produced at the Blackfriars Theatre in 1613.

TUESDAY, JANUARY 18th.

3, Rawicz and Landauer at two pianos. **3.10,** Cartoon Film. **3.15,** Table Tennis Demonstration. **3.30,** British Movietonews. **3.40,** Theatre Parade: excerpts from "Oh You Letty."

9, Starlight. **9.10,** Talk. **9.20,** Gaumont-British News. **9.30,** Cabaret, including Arthur Prince and Reine Paulet.

WEDNESDAY, JANUARY 19th.

3, "Footwork": a demonstration of new dancing steps, by Phyllis and Freda Haylor. **3.10,** Jane Carr in songs. **3.20,** Gaumont-British News. **3.30,** 113th edition of Picture Page.

9, Repetition of 3 p.m. programme. **9.10,** Les Allen and his two pianists. **9.20,** British Movietonews. **9.30,** 114th edition of Picture Page.

Receiver Noise—

AND THE EFFECT OF AERIAL COUPLING

By

"CATHODE RAY"

WHAT exactly *is* the hissing or roaring sound a sensitive receiver makes when the volume control is turned up and there does not happen to be anything else for it to do?

Fortunately, one doesn't very often hear much of it, because a receiver is generally tuned to some station strong enough to call the AVC into action, thus rendering it temporarily a more or less insensitive receiver. And unless something is wrong an insensitive receiver does not emit unintentional noise.

Now that the British Post Office and a serious committee and several books have devoted themselves to the electrical noise caused by trams, lifts, electric fans, and so forth, this sort is fairly well known, though, perhaps, more often under the title of "interference." The interference due to the workings of Nature's electrical systems is distinguished by the description "atmospherics," and is also very familiar, at least during thundery periods. Interference from radio transmitters—especially those numerous survivors of the spark age—may also contribute to the general confusion of noise. But it is not absolutely inevitable that any of these should be present at any given moment. Yet a very sensitive receiver giving its maximum amplification is inevitably noisy.

Advantages of Screening

If the receiver is perfectly screened—including suitable precautions to prevent any electrical interference working its way in via the mains connection—all noise due to the above-mentioned external causes ceases when the aerial is disconnected. It is quite easy to take advantage of this to test how nearly perfect the screening is, by tuning to a powerful local station. If it is a main station within a few miles it is highly improbable that the screening will be good enough to keep it out. Even an inch of exposed wire is enough to bring in something audible; assuming all the time, as we are, that the receiver is a sensitive one, such as a superhet with a preliminary RF stage. With close-fitting "hats" on the valves, a metal floor to the chassis totally enclosing the lower deck, and the other screening precautions adopted in the better sets of this type, one has a reasonable hope of shutting out everything short of a very strong local transmission. And as *ordinary* interference can be assumed to come short of such an extreme strength, it is among those things shut out. Some of the less well-constructed sets are liable to bring in quite a large selection of programmes without an aerial, and, therefore, probably any fairly strong external noise source. There may seem to be no particular disgrace about this, seeing that a receiver is intended to receive. But the point is that if the screening is nearly perfect there is at least the possibility of putting the active part of the aerial at some distance away from the receiver (as in the anti-interference aerial system) and away from electrical noises originating indoors or near ground level. Obviously an unscreened receiver leaves a very bad loophole when used in such a system.

But that is by the way. Even assuming perfect screening, there is still noise, originating in the receiver itself. Some of it may be due to curable causes. Bad contacts anywhere, or leakages, are common noise producers; switches, volume controls, resistors, intervalve transformers and valves (including their holders) are among the components most likely to develop these faults. And with the present extreme competition in the battery market it would not surprise me to learn that battery noises are no less frequent than previously. Other sorts of noise that can be produced by a receiver itself are those due to audible self-oscillation, the commonest causes of which are microphonic variable condensers or valves, or a high-resistance HT battery. It is usually quite easy to distinguish these by the nature of the sound, which is of some definite frequency, anything from "motor-boating" to a high-pitched whistle. The bad contact, etc., noises, although much more irregular and possessing an even wider repertoire, generally have something distinguishable about them. For instance, even the continuous and nearly featureless noise described as "frying" has its little bursts which might be imagined to correspond with the ejection of spots of fat from the frying-pan.

Inherent Receiver Noise

But the noise left after an infallible fault-tracer has done his best is as colourless as anything that can possibly be reproduced by the receiver. That is to say, if it tends towards any particular pitch, it is only because the set has a pronounced resonance at that frequency. Theoretically, all frequencies are present in equal proportions. But because the ear is most responsive to upper-middle frequencies (and also because most loud speakers have more or less of a resonance near the same part of the scale) the noise is most nearly described as a *hiss*.

The cause has several times been explained in *The Wireless World*, most comprehensively and clearly by A. L. M. Sowerby.[1] Actually, there are two closely related causes, one in a valve and one in a circuit. Theoretically, every valve and circuit contributes some noise, but except for one of each the amount is generally small enough to neglect. In each case it is, naturally, the one followed by the greatest amplification; namely, the input tuned circuit, and the first valve. And the noise is closely connected with the fact that although some things, for example, air and water—and electricity—appear to be continuous and uniform, unlike such things as sand and gravel, which are obviously made up of separate particles, in reality everything is composed of separate particles, however it may appear to the contrary.

Some time ago I likened the flow of electric current across the space within a valve to a stream of flour, which seems to pass continuously and silently. But just as a microscope reveals the separate grains of flour, invisible as such to the eye, so the amplification available in a multi-valve receiver actually reveals the irregularities in the flow of electric current within the valve due to the fact that it is composed of a vast quantity of separate electrons.

No Definite Frequency

An absolutely steady electric current is therefore as impossible as an absolutely steady payment of the amount due under a hire-purchase agreement. The flow of money takes the form of sudden jerks, lasting for only the infinitesimally small portion of the week or month during which it changes hands or bank accounts. In the same way an electric current is made up of a number of separate instalments. Unlike hire-purchase transactions, however, the number of instalments per second is inconceivably large, and by chance it may happen that two or three or more electrons arrive in the brief time during which, on the average, only one is to be expected; and this means a sudden increase in the flow, followed, perhaps, by a deficiency in the next moment. The intervals between these irregularities are themselves absolutely irregular, so they correspond to no one frequency more than another. In a selective receiver only a certain band of frequencies is amplified to the extent necessary to render these irregularities audible, but that band includes all that is thought to be necessary of the whole audible scale of frequencies, so the resulting noise has no clearly defined pitch, unless, as I said, there is a very

[1] *Oct. 9th and 16th, 1936.*

Receiver Noise—

pronounced audio resonance somewhere.

It is rather like the noise of rain on the roof. If the raindrops fell uniformly the sound would be a clear musical note corresponding to the frequency of striking. As in fact their arrival is entirely random, the sound produced is a noise of no definite frequency. But the sound does depend also on the nature of the roof, so that if one lived inside one of those tympani or kettle-drums that one sees at symphony concerts, which have their tops stretched and tuned by screw handles to a definite note, the sound of rain on the roof would, no doubt, reproduce that note quite clearly. I have never actually tried the experiment.

Haphazard Fluctuations

The cause of circuit-generated noise, although very similar, may not be quite so easy to see, because it exists where no electric current is meant to be flowing. As already implied, an electric current consists of the movement of the small units known as electrons. These particles are there all the time in the wire or other material composing the circuit, and (except at the absolute zero of temperature, 273 deg. below zero centigrade, and never actually attained) they are on the move all the time. But unless there is a preponderance of movement in one direction it does not constitute an electric current. In an open circuit, or other circuit where there is no current, the movement of electrons is like that of a crowd at a Sale of Work when the doors are closed. Although Mrs. A may move from one end of the hall to the other, it is quite likely that her movement is neutralised by that

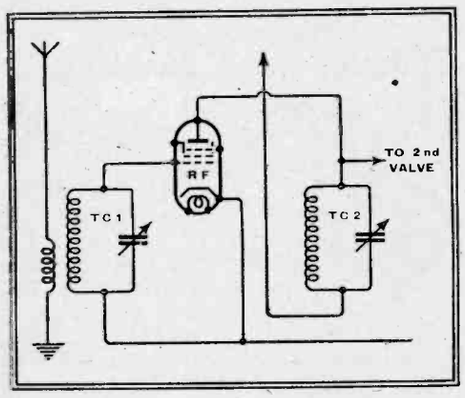

Fig. 1. The principal sources of unavoidable noise in a sensitive receiver. Part is generated in the valve, and part in the first tuned circuit TC1.

of Mrs. B in the opposite direction. Unless some special event, such as the announcement of a raffle, takes place, all the bustle and movement may result in no continuous current either up or down the hall. But as the crowd consists of individuals, there may be at any given instant only 49 people moving up as compared with 51 moving down; while the next instant the figures may be reversed.

In a rather similar way there are entirely haphazard fluctuations of electrons in any circuit. The higher the impedance of the circuit, the greater the voltage produced by a given current; so, although the movements of electrons producing the currents are entirely irregular, if they occur in a circuit tuned to a certain frequency, those currents at and near that frequency cause greater voltages.

This is what happens in the input circuit of a receiver (Fig. 1). Only the first valve is shown, and those irregularities in the current flowing from cathode to anode (as the electron flies!) that occur at or near the frequency to which the second tuned circuit TC2 is tuned are amplified and passed on. The irregular currents in the first tuned circuit, TC1, although comparatively small, are amplified by the valve; and, as Sowerby has shown, in a typical receiver they are likely to comprise the greater part of the combined noise, at least on medium and long waves. On short waves the combined noise is likely to be much less, and valve noise may be the greater part of it; so any extra amplification that can be obtained, especially in TC1, is more likely to be worth having.

There is not very much that can be done to reduce the proportion of noise to signal, apart from the matters that will already have been attended to in a good design—selectivity ample to remove adjacent-channel interference (and, therefore all noise frequencies on unwanted bands); elimination of second-channel interference; and reduction of anode current in first valve to a minimum consistent with efficient operation.

Importance of Aerial Coupling

Perhaps the most important thing is aerial coupling. If the coupling is very loose, as it may be in the interests of avoiding detuning in a gang-controlled arrangement, the receiver noise is present, but not much signal. So the signal/noise ratio is very poor. As the coupling is increased a small amount of circuit noise is introduced from the aerial and primary coil (not taking account of external interference) but the signal is increased in a much greater proportion and the secondary circuit impedance (and hence its noise) is reduced, so the signal/noise ratio is improved. When the coupling is made very close indeed the magnification of TC1 goes down rapidly and with it the signal strength and selectivity; in the meantime the valve noise remains constant, and by comparison may now be the most serious factor; so the signal/noise ratio passes its maximum and again declines.

F. C. Williams[2] has recently worked out the effect of aerial coupling on signal/noise ratio and Fig. 2 is derived in slightly modified form from his results. The coupling is expressed as the percentage by which the dynamic resistance of TC1 is reduced thereby. For instance, with the aerial disconnected entirely it might be 100,000 ohms. When the aerial is coupled 50 per cent. (according to this way of reckoning) the resistance is down to 50,000. Incidentally, this is always the condition that causes the greatest proportion of signal picked up by the aerial to be passed on to the receiver. But as still closer coupling causes the receiver noise to be reduced the signal/noise ratio keeps

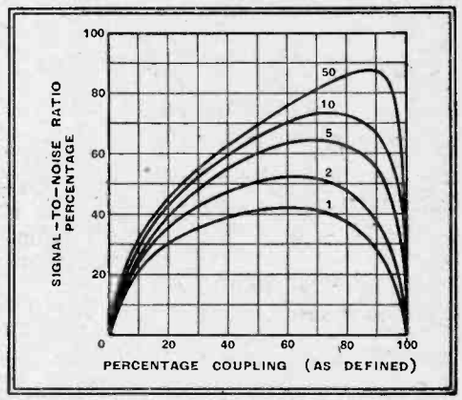

Fig. 2. Curves showing how the signal/noise ratio depends on the coupling between aerial and first tuned circuit. On the graph, signal-noise ratio is shown as a percentage of that in the aerial circuit itself.

on improving for a while. A signal/noise ratio of 100 per cent. means that it is as good as in the aerial circuit itself, which means that the contributions of TC1 and the valve are relatively negligible. Of course this condition is never reached.

A number of curves are shown to take account of varying proportions of circuit and valve noise. In the curve marked "1" they are equal; while in the curve marked "10" (which is typical of what one might find in practice in the medium wave band) the circuit noise is 10 times as great. It is easy to measure the ratio if one has a square-law output meter (such as an anode-bend valve voltmeter or a thermal instrument), by noting the reading in watts with aerial disconnected, and then again with TC1 short-circuited. The former measures the total noise and the latter the valve noise only. Even without using a meter one can judge in this way how much of the noise is due to the valve only. And I have already explained how to be sure that external noise with aerial disconnected is negligible. The difference must, therefore, be due to TC1.

The moral of Fig. 2 is that, so far as signal/noise ratio is concerned, the aerial coupling should be very much closer than it usually is. Even at 50 per cent. the proportion of noise is greater than it might be, but that is far tighter coupling than is usually employed; 10 per cent. is a more usual figure, and one can see how poor a performance this gives when noise is the limiting factor. Unfortunately, tight coupling is impracticable unless TC1 is separately tuned. If single-knob tuning is progress, it is obtained at a price.

Kempe's Engineer's Year Book for 1938 (price 31s. 6d.) has just been issued in completely revised form by Morgan Bros., 28, Essex Street, London, W.C.2. This extremely useful compendium contains formulae, rules, tables, data and general information relating to all branches of engineering. In this age of specialisation, "Kempe's" is more useful than ever as a source of information on subjects outside one's own particular field of activity.

[2] *Journal I.E.E., Dec. 1937, p. 751.*

UNBIASED

By FREE GRID

Secrets of Parliamentary Opposition

I AM interested to learn that the P.M.G. is at long last contemplating doing something drastic about the question of electrical interference. I should have thought that he would have had the whole country solidly behind him with the exception, of course, of the users and manufacturers of the offending apparatus and similar unprincipled people, but I am surprised to learn that this is far from being the case.

Happening to sit next to a well-known parliamentarian the other night at a public dinner held to celebrate something or other, I learned from him that strenuous efforts were being made by certain interested parties to defeat the Bill even before it is presented. I suppose that even if I gave you a hundred guesses you would not be able to name correctly the section of the community behind the move to defeat the Bill, and so I will tell you. The people in opposition are those who supply poles for aerial masts.

For a long time even I could not see how on earth an anti-static law could adversely affect this particular trade, but my dinner companion speedily enlightened me. He pointed out that in the early days of broadcasting the vendors of wireless poles did a roaring trade, but this declined to negligible proportions as sets became increasingly sensitive and people took to indoor and other makeshift forms of aerial. When sets became

Lobby secrets revealed.

still more sensitive, however, the mast-selling trade started on the upgrade again, since the increasing sensitivity of sets meant that they picked up more electrical interference, and one of the best anti-interference measures, as everybody knows, is a lofty outdoor aerial with a screened downlead.

The strangest thing about the whole business, so I learn, is that nowadays pole vendors are not merely selling one mast to every listener, but have found that when a pole is bought, the purchaser renews it about once a year, not because the base has rotted away but for the simple reason that the increasing sensitivity of sets and the growing popularity of domestic electrical apparatus of the beauty-parlour class causes a corresponding increase in the area of interference which, naturally, calls for a still loftier aerial to counteract it. Curves have been prepared by the Pole Vendors' Association to show that the average height of wireless masts in this country increases by about five feet each year.

So scientifically are future sales of commodities forecast nowadays that arrangements had already been made for importing into this country five years hence a large quantity of Douglas firs, since actuaries had calculated that so severe would the interference have become by then that tree trunks of this height would have been needed as aerial poles. All these calculations have been brought to nought, however, by the spoil-sport attitude of the P.M.G., and this is why there is such strong opposition to the Bill on the part of the pole sellers. Truly one half of the world doesn't know how the other half lives!

The Wealdstone Effect

AN interesting legal point has arisen as a result of the recent G.P.O. "drive" in the Wealdstone district in which, as reported in *The Wireless World* recently, fifty-one alleged licence-dodgers were rounded up. A friend of mine who happens to be "in the know" in the matter of Post Office secrets tells me that the P.M.G. myrmidons are getting very worried at the fact that there are still only 8½ million licences issued whereas statistics concerning the number of households in the country indicate that the figure ought to be round about the 11 million mark.

Actually, it is thought that there are very few households without a wireless set these days, and there must therefore be well over two million licence-dodgers at large. The important point is that a large proportion of these pirates are completely beyond the clutches of the law owing to a very interesting reason which is known in G.P.O. circles as the "Wealdstone Effect," this name being derived, of course, from the popular habit of naming "effects" after the place in which they first came to light, or are most prolific, as in the case, for instance, of the Luxemburg Effect.

Although there was a total bag of fifty-one at Wealdstone, my friend tells me that it is estimated that the figure ought to have been about five hundred. The

"Useless their calling in the daytime."

point is that, in this particular part of the world, as in the case of other suburbs of all large cities, there is a large number of that ever-increasing section of the community where both husband and wife journey to the city to their daily toil, leaving the house silent and empty throughout the day and a large part of the evening.

It is obvious that there is no reason whatever, save a moral one, why these people should bother about buying a licence, since there is never any likelihood of one of the P.M.G.'s underlings calling to inspect it as they have every right to do. It is useless their calling in the daytime as nobody is in, and long before the Wealdstone workers homeward wend their weary way the shades of night have fallen and the P.M.G.'s slaves have retired to their kennels.

Choosing a Television Set

I HAVE been spending a good deal of time lately attending demonstrations of big-screen television, and as a result I am in somewhat of a quandary. When I say big-screen television I am referring to the large domestic size and not the cinema one, and my difficulty is to make up my mind whether I prefer the electrical type (i.e., cathode ray) or the mechanical type. Before many moons are out both these types will no doubt be in the shops and I shall then have to make my choice.

At present I am inclined to favour the mechanical system as exemplified by Scophony for the simple reason that this firm have taken such meticulous care to give themselves an etymologically sound name instead of a wretched Latin and Greek hybrid like the word "television" is, for instance. My argument is that a firm which takes such infinite pains to be accurate in small things is likely to be still more accurate in large things like the design and construction of a television receiver. Perhaps, however, before I make my final choice the cathode-ray school would like to put their side of the case before me.

Diversity Reception

OVERCOMING THE ILL-EFFECTS OF FADING

By H. V. GRIFFITHS
Engineer-in-Charge, B.B.C. Receiving Station, Tatsfield.

ALTHOUGH comparatively few private individuals are likely to consider the installation of multi-aerial receiving systems, such as those discussed in this article, it is likely that the use of such methods will increase. Diversity reception, which undoubtedly provides a better and more consistent signal than any single receiver, may well be used in the future for providing re-broadcast programmes to comparatively small isolated communities.

WE may define diversity reception as the separate reception of signals arriving by more than one propagation path, and their combination to produce a composite signal. One of the major difficulties to be overcome in the reception of distant short-wave signals is the phenomenon of fading. A signal received on a simple single-aerial receiver system without AVC may show output variations corresponding to fluctuations of received field of 20 to 1, or even 100 to 1. These fluctuations are of random periodicity; intervals between peaks may be of the order of a few seconds or as short as 1/10 second. Very rapid, or "flutter" fading, when present, is difficult to avoid by means of reception technique, but the effect of slower fading may be sensibly decreased or even eliminated by a combination of AVC and diversity methods.

The fading of radio signals is caused by changes occurring in the path taken by the received wave. Changes in the refracting or attenuating properties of the medium between transmitter and receiver cause the amplitude, horizontal direction, vertical angle and polarisation of the resultant wave arriving at the receiving aerial to vary, and the variations will not be the same at positions for the receiving antenna spaced a few wavelengths apart.

There are, therefore, several methods of diversity reception possible, which may broadly be classified into four groups:—

(a) Spaced-aerial diversity.

(b) Frequency diversity, i.e., reception of the same programme transmitted simultaneously on more than one carrier frequency.

(c) Polarisation diversity, using two aerials intended to receive differently polarised waves.

(d) Vertical-angle diversity.

Experiments in the use of (a), (b) and (c) above were commenced both in Great Britain and overseas in about the year 1927. Of those experiments abroad, mention should be made of the installation of R.C.A. Communications, Inc., at Riverhead.[1] The method of diversity reception classified under (d) above as "vertical angle diversity" has recently been developed particularly in the U.S.A. by engineers of the American Telegraph and Telephone Company, at Holmdel, New Jersey, the system used being given the name MUSA (Multiple Unit Steerable Antenna).[2]

It is with the developments in Great Britain with which we are here concerned, and these commenced in September, 1927, when it was agreed by the British Broadcasting Corporation and Marconi's Wireless Telegraph Company that joint experiments should be commenced to investigate the possibilities of diversity, and of spaced aerial reception in particular.[3] It was decided to attempt quite large spacing between two aerial systems as a beginning, and it was due to the courtesy and assistance of Lord Rayleigh in offering the loan of suitable sites that two simple Marconi-Franklin arrays were erected, towards the end of the year, near Terling, Essex. The arrays were oriented on the true bearing of New York, and, in each case, consisted of four vertical elements and reflectors.

The aerials were spaced two miles apart—although only 1¼ miles across the wave-front—and a small wooden building was placed half-way between the aerial sites. In this building, the second part of the intermediate-frequency amplifiers, the beating oscillator and all low-frequency equipment of the two receivers was located. At each of the aerial sites the RF amplifier, 1st detector and two stages of IF amplification were installed, with remote-control switching from the central building. An additional low-impedance IF stage was added in order to facilitate connection to the IF transmission line. Between the central site and the aerial sites, transposed open-wire transmission lines carried the IF signals to the central site, and the beating oscillator to the distant sites. Transducer networks and screened transformer terminations were inserted in order to avoid interference due to pick-up of unwanted signals on the transmission lines.

At the central site, the IF signals received from the transmission lines were passed to two further IF stages in each case, thence to separate second-detectors. Thus far the receivers were conventional super-heterodynes except that they were divided into the two parts connected by transmission lines over a mile in length. Combination of the two signals was carried out at audio frequency. No AVC was used, as suitable variable-mu valves were not then available, but a limiter was in-

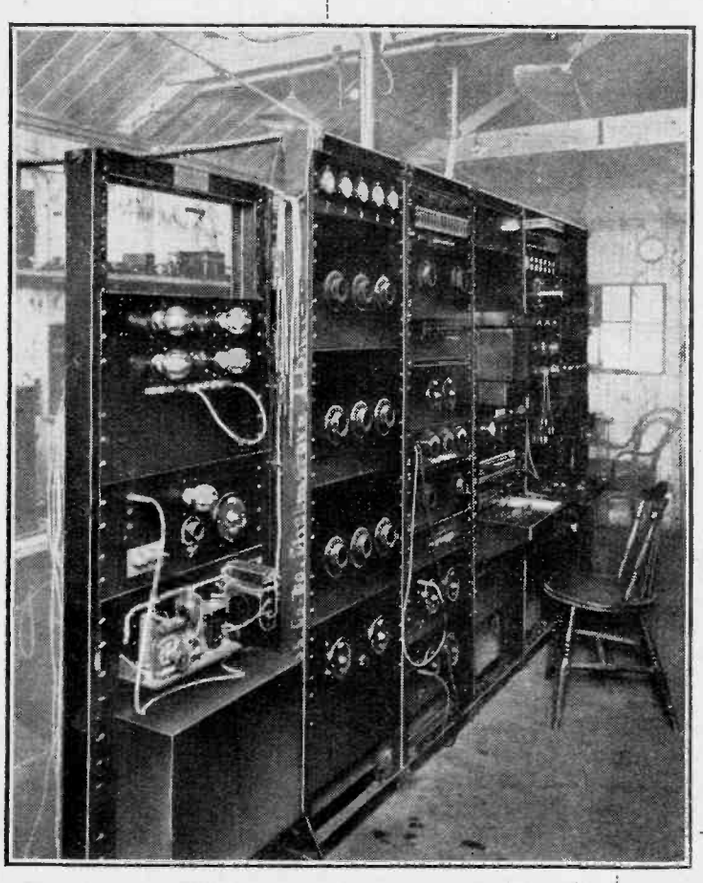

Diversity equipment used during early experimental work at Terling.

Diversity Reception—

stalled for use when receiving telegraph signals, in which the Marconi Company was interested.

With the co-operation of the American General Electric and National Broadcasting Companies, bi-weekly two-way telephony experiments were carried out, besides which a daily schedule of observations was maintained at Terling on broadcast signals. The transmitters observed were W2XO, 13.66 Mc/s; W2XAD, 13.63 Mc/s; and W2XAW, 13.69 Mc/s for telephony and broadcast signals. Transmissions from WHR and WAJ were used for telegraph experiments. The two-way telephone experiments made use of G5SW Chelmsford, which had, at that time, commenced transmission of B.B.C. programmes on short waves for a few hours each weekday, and was jointly maintained by the Marconi Company and the B.B.C. The three simultaneous transmissions of a common broadcast programme from the U.S.A. stations mentioned above, viz., W2XO, W2XAD and W2XAW, all situated at Schenectady, N.J., permitted comparison of the merits of frequency diversity and of spaced aerial diversity. Unless two or more simultaneous transmissions by transmitters situated geographically close together are available, frequency diversity cannot be attempted without additional complication in the form of delay networks inserted in receiver outputs before combination. The line-delay difference on a common programme radiated from transmitters at, for example, Schenectady and Pittsburgh, may be sufficiently serious to produce a very objectionable "echo effect" if direct combination be used at the receiving end. It is for this reason that frequency diversity is seldom a possible method of avoiding fading on U.S.A. or other SW broadcasting heard in England.

The Terling experiments were continued until June, 1930, and the author took part for the last two years as one of the B.B.C. staff allocated to this work. A third receiver was designed and installed at the central site. Cathode-ray tube studies were made of the audio-frequency output from two receivers tuned to W2XO when modulated with a steady tone of 1 kilocycle per second. These showed that random changes of phase occurred on the audio signal, as was to be expected. Relays were, therefore, used for the purpose of cutting out the weaker signal from the combined output, retaining only the stronger signal at any instant. This relay system was later abandoned because of the mechanical limitations to the operating speed of the relay and because the phase changes did not seem of much importance from the standpoint of the human ear.

On October 10th, 1928, the first relay from U.S.A. via the Terling diversity equipment was carried out by B.B.C. stations. The broadcast of the arrival of the "Graf Zeppelin" in New York at the conclusion of her maiden transatlantic voyage on October 15th, 1928, may be remembered as being substantially free from short-wave fading. Spaced-aerial diversity, using three separate antennæ as described, was considered to have passed its early experimental stages and completely justified the Terling developments from a "rebroadcasting" point of view.

The utility of diversity reception for telegraph circuits was also demonstrated. Comparison between signals received via Terling and via Somerton showed that commercial telegraph signals would remain recordable on a falling signal almost equally well from either station. But the comparison was between receiving points having very different ratios of antenna efficiency and therefore costliness. The Somerton arrays were large, multi-element ones of considerable height compared with the Terling aerials, which comprised, even when the three were added together, many fewer elements and less than half the height. The larger Somerton array gave a slightly better signal-to-noise ratio, as was to be expected.

In view of these encouraging results, the Terling experiments were continued. The addition of the third aerial showed

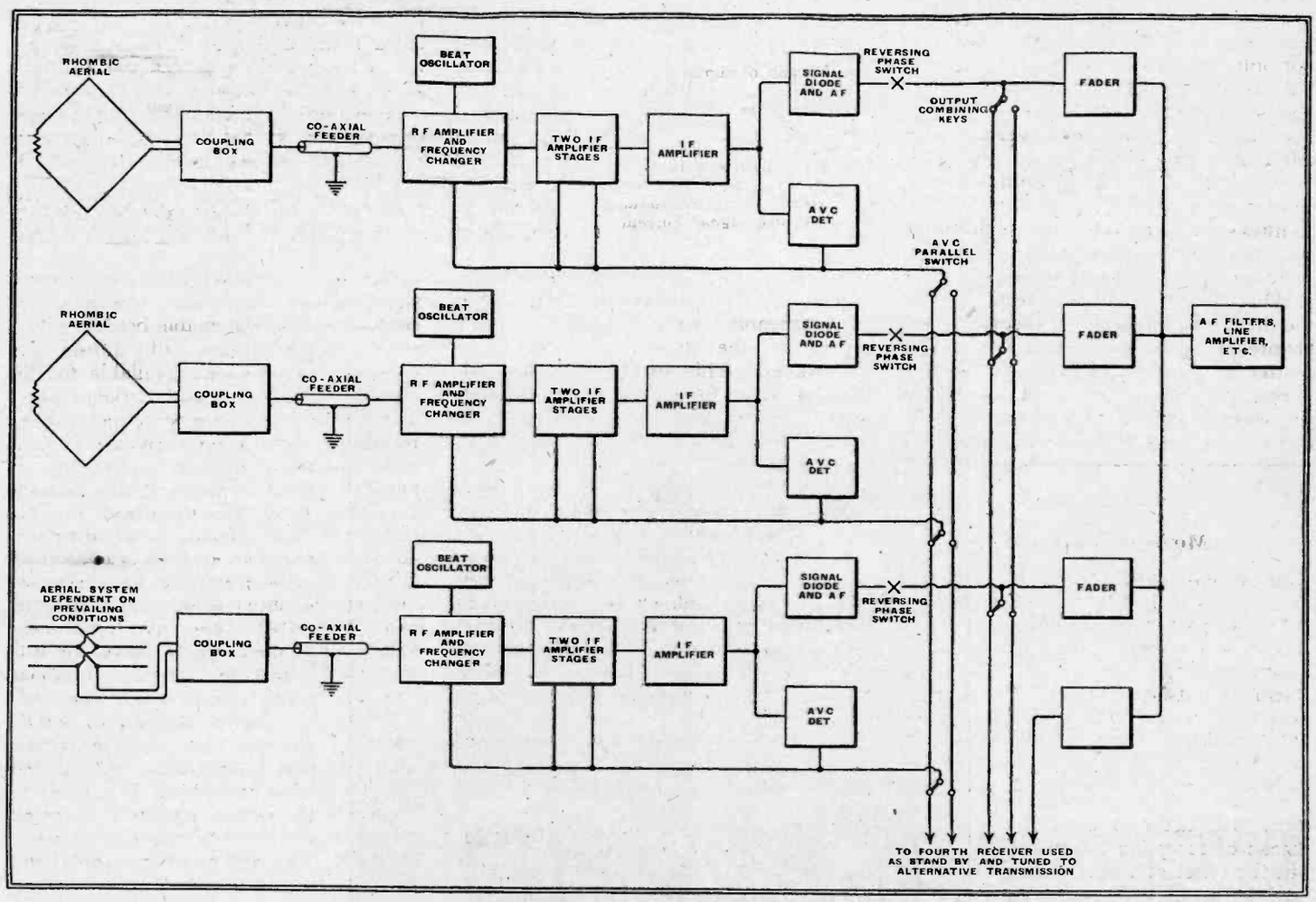

Diagram showing the B.B.C. equipment at Tatsfield for independent and diversity reception. The third aerial, of which the choice depends on prevailing reception conditions, may be an inverted "V," horizontal "V" or a Franklin "Uniform" type.

Diversity Reception—

material improvement compared with the results obtained from the original two aerials, and the occasions when a complete fade-out occurred simultaneously on the triple system were few. The effects of "selective fading" were, however, only partially overcome.

Selective fading may be defined as independent fading of the carrier and sideband frequencies. It is, indeed, a demonstration of frequency diversity in a very undesirable form, and is due to the arrival at the receiving aerial of many waves having different phase-angles, each having taken a different path between transmitter and receiver. These differing paths are not only different in the horizontal plane, but also in the vertical plane; the former represent the phenomenon known as "scattering," whilst the vertical-angle differences may be caused by the variations in angle of the transmitted wave, differences in the degree of refraction encountered in each path, and variations of such refraction due to the instability (turbulence) of the refracting layers.

When to these multiple effects is added the incessant changes of absorption encountered by the signals, it is a simple matter to visualise the causes of both the fading encountered on short waves and the selective effect which accompanies it. It becomes more difficult only when one endeavours to evolve methods of overcoming them.

Move to Tatsfield

At the close of the joint B.B.C.-Marconi experiments at Terling it was decided that the major part of the receiving equipment should be reinstalled at the B.B.C. wavelength-checking and general receiving station at Tatsfield, Surrey. This station, originally situated at Keston, already kept an intermittent watch on SW broadcasts of interest, in addition to the work on medium waves for which it had been erected. It would obviously be concerned in the matter of wavelength and interference checking of the rapidly developing Empire services of the B.B.C. on short waves, and it was logical to carry out all future SW reception there on a permanent basis.

Observation at Terling and elsewhere had shown that quite satisfactory diversity could generally be obtained, using aerial spacing much less than that in use at Terling. The minimum distance between aerials for effective diversity was found experimentally to be of the order of four wavelengths, when the antennæ were spaced at right angles to the direction of the arriving waves. This spacing was therefore decided upon for Tatsfield, but suitably spaced aerials could not immediately be erected because the area of B.B.C. land was insufficient.

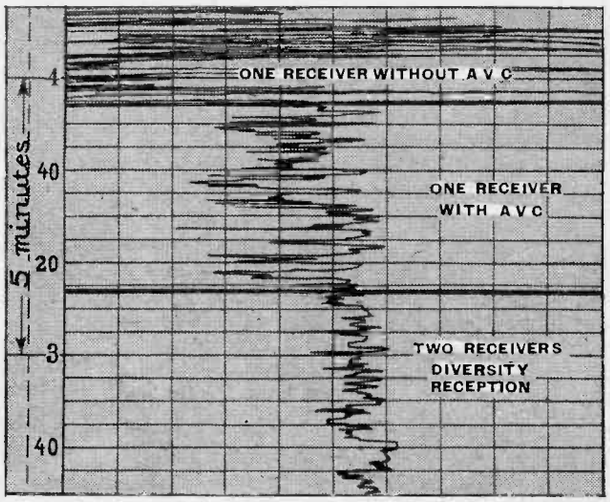

This graph of signal strength, which relates to W3XAL, is taken from the B.B.C.'s recording instrument at Tatsfield. It shows clearly how the use of two receivers with spaced aerials and linked AVC tends to curb the violent fluctuations of rectified signal current.

Another reason for caution before undertaking the expenditure associated with diversity aerials for Tatsfield was the difficulty of deciding which type of aerial array should be used. Terling had been experimentally confined to a narrow band of wavelengths, but at Tatsfield it would be necessary to cater for reception on any of the bands recently allocated to broadcasting—viz., frequencies of 6, 9.5, 11.8, 15.2, 17.8, and probably 21.5 Mc/s. Directional aerials which were efficient only over a narrow frequency band would be an unnecessary expense if an effective type having a wider frequency range were found.

Between 1931 and 1934 reception experiments and relays were carried out at Tatsfield, using several different types of aerials and very limited spacing. Diversity reception, when used, was generally confined to that obtainable between oppositely polarised waves. But during 1935 sufficient land became available for the erection of two additional aerials, spaced about 80 metres from one another. Good results had already been obtained over a wide frequency band by using the inverted V type of aerial.[4] It was decided to use the horizontal modification of this, known as the rhombic (or diamond) aerial.[5] Two rhombic aerials directional to New York were accordingly erected on the newly acquired land. In addition to their horizontal directivity, the new aerials were designed to have vertical directional diagrams which overlapped but had the centre line of the main vertical lobes at 14½ and 23½ degrees respectively, measured from the horizontal. Measurements carried out in Britain and the U.S.A. showed that the principal downcoming "rays" were to be expected at these angles. Vertical angle "steering," similar to the MUSA system previously referred to, was not attempted.

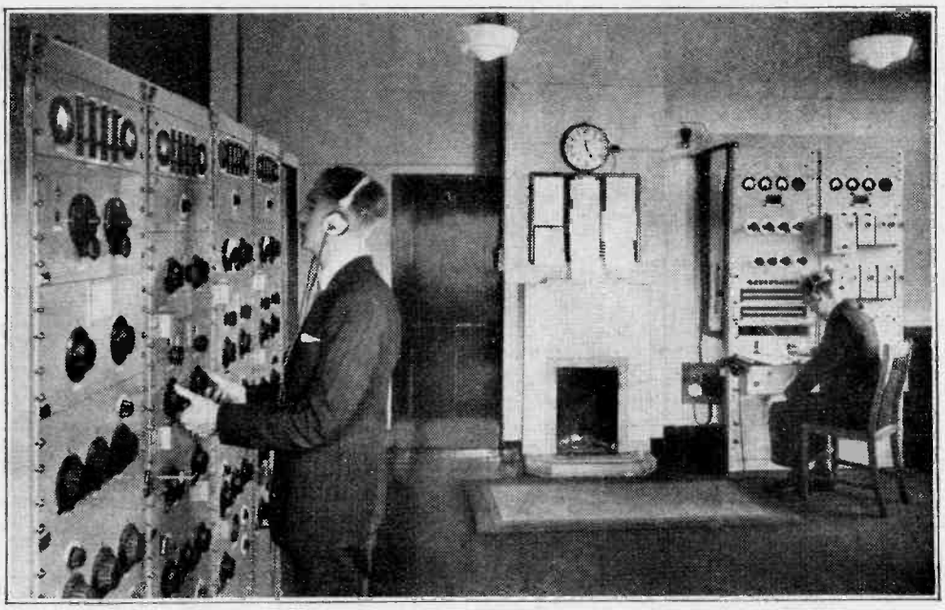

General view of the diversity receiving apparatus at Tatsfield: line relaying equipment in the background.

Aerial Masts

The Rhombic aerials were each supported upon four wooden poles supplied by the Post Office. Several of the poles are unusually high ones to compensate for the slope of the ground, and only the two tallest, which are approximately 90ft. in height, are spliced. Connection to the receiver inputs in the station building is obtained by means of underground transmission lines of the unbalanced concentric type manufactured by Standard Telephones and Cables and known as Co-axial HF Cable.

Impedance transforming networks placed in water-tight boxes at the top of the rear poles connect the aerial to the co-axial cable.

The number of receivers at Tatsfield was also increased, and the period between 1935 and 1937 has, it is believed, demon-

Diversity Reception—

strated the effectiveness of the apparatus used. Valuable experience has been gained in the operation of receivers for diversity reception, and modifications have been carried out to equipment in the light of this experience. For instance, the types of fading encountered vary very greatly in character, and a different technique of reception has been evolved to suit a number of different conditions.

Slow fading of moderate depth will best be met by a line-up, such that one receiver holds the signal most of the time. Deeper slow fading requires a more uniform setting of the maximum gain of the three receivers used, while fading of the slow-fall-and-quick-return type calls for low maximum gain and slow-acting AVC, otherwise sudden peaks of noise are very pronounced on the combined output. If the "selective effect" is very pronounced it is generally accompanied by carrier fading of the "quick return" type mentioned above. The low basic gain adjustment must then be modified to ensure the maximum of single-receiver working in order to minimise the distortion. There are conditions of flutter fading when either fixed gain without AVC or very slow-acting AVC are preferable.

Graphical Record

A record, showing linear variations of signal strength encountered under typical deep fading conditions, is reproduced here. The station was Boundbrook, W3XAL, on 17.78 Mc/s, and the recording shows the effect of using two spaced aerials and "locked" AVC, compared with only one receiver, both with and without AVC. The use of three receivers produces a further improvement, although the difference between two and three receivers is not as great as that between a single receiver and two in diversity.

The conditions of flutter fading and selective effect are the most difficult to overcome even by utilising the most modern technique in diversity reception. Before enlarging upon present, and possible future, developments in these directions it may be relevant to mention another difficulty encountered when first using diversity in conjunction with modern receivers incorporating AVC.

The effect of the automatic control is to increase the gain of the receiver as the signal input decreases during a fade. On combining the outputs of two receivers having spaced aerials, it was immediately obvious that, although the audio-frequency output was more uniform in volume than when one receiver alone was used, the background noise fluctuated considerably and was very noticeable at instants when one receiver carried a strong signal and was contributing little noise. The noise in this case was being contributed by the other receiver carrying a weaker signal and having automatic volume control at or near maximum gain.

A simple method of overcoming this would be to use only one AVC system for two or more receivers having combined outputs. The single AVC rectifier would thus be actuated by the strongest signal, and would reduce the gain of the receivers carrying weak inputs and thus reduce their noise quota. A modification of this arrangement at Tatsfield permits the use of separate AVC rectifiers on each receiver, but the combination of two or more AVC outputs when required for diversity reception. The receivers are thus flexible and may be used singly and separately, or in groups of two, three, or four, with "locked" AVC.

A further flexibility which it was decided to retain was the use of separate beat-oscillators, which, although adding to the adjustments necessary during diversity reception periods, enables the receivers to be used entirely independently at other times. The use of separate oscillators assumes that each receiver will have its intermediate frequency sufficiently different from the others to avoid interference whistles when tuning to the same signal. The IF amplifiers at Tatsfield have considerable flexibility of adjustment, but are at present arranged to have mid-band frequencies of 780, 805, 830, and 855 kc/s approximately, a spacing of 25 kc/s having been found to be quite satisfactory.

The use of the above intermediate frequencies, which are about twice that in normal use in domestic all-wave receivers, has certain advantages. In particular, they decrease the image-frequency and second-channel interference encountered in superheterodyne reception, at the same time decreasing the adjacent-channel selectivity obtainable from a given LF amplifier. Finality in the design of the intermediate amplifiers has not yet been reached, even assuming that finality ever can be reached in the field of radio equipment!

Some of the stations available for reception by Tatsfield are of low power when compared with our own Empire stations or the transmitters used for the transatlantic telephone service. Again, the broadcasting transmitter relayed by Tatsfield may not be using a directional aerial, although this is becoming a less frequent handicap.

Relays from U.S.A.

American relays via Tatsfield are confined to the following transmissions as a general rule: W2XAD Schenectady, W3XAL Boundbrook, W2XAF Schenectady, W2XE Wayne, and (more rarely) W8XK Pittsburgh, W1XK Millis. Of these it will generally be the case that only two stations at most will be at intelligible strength and radiating the desired programme.

In this article an attempt has been made to sketch the beginnings and the progress of the use of "diversity" methods of reception by the B.B.C. Parallel development has, naturally, occurred elsewhere, and the British Post Office and other large interests in radio reception in England, All-India Radio, the broadcasting authority of Canada, and other such authorities in the Empire, have all developed systems making use of diversity phenomena.

It is in outlying parts of the Empire that diversity reception methods will perhaps be of greatest service. The engineer there has often advantages such as cheap land on which to erect spaced aerials, several B.B.C. Empire transmitters of increased power from which to choose, in addition to other high-power American and foreign broadcasts. In this regard the B.B.C. has endeavoured to foster the development of reasonably priced equipment suitable for diversity reception and to advise the smaller broadcasting and re-diffusion authorities within the Empire on the subject of aerials and feeder-lines.

The concluding paragraphs of this description of diversity reception may well be devoted to an attempt to visualise the direction which future developments are most likely to take.

Apart from possible improvements to the receiver circuits not special to diversity working, the major developments will probably be in the antenna systems used and associated phasing, coupling, and feeder circuits. Sharper directional diagrams in the vertical plane, together with steerability of the diagram in both planes, will enable groups of waves which have traversed closely similar paths to be combined with other path-groups after suitable phase correction. Complex combinations both at signal-frequency and also of receiver "chains" will be possible.

Difficulties of AF combination may be overcome by the use of thermionic (electron-operated) relays ensuring that only one receiver output, carrying what is momentarily the best signal, is audible on the diversity output.

The limiting factor is generally not what is possible technically, but what is economically practicable. A simple form of spaced-aerial diversity will probably content even the more enthusiastic private experimenters, while a more elaborate antenna system but comparatively cheap feeder lines of the four-wire diagonal type will probably suffice for the smaller commercial relaying or re-diffusion centres.

REFERENCES.

(1) Peterson, Beveridge and Moore. "Diversity Telephone Receiving System of R.C.A. Communications Inc.," *Proc. I.R.E.*, April, 1931.

(2) Friis and Feldman. "Multiple Unit Steerable Antenna for S.W. Reception," *Bell System Technical Journal*, July, 1937.

(3) W. P. Wilson. *Marconi Review*, April, 1930. "Spaced Aerial Reception."

(4) E. Bruce. "Developments in Short-wave Directive Antennæ," *Proc. I.R.E.*, August, 1931; *Bell System Technical Journal*, October, 1931.

(5) Bruce, Beck and Lowry. "Horizontal Rhombic Antennæ," *Proc. I.R.E.*, January, 1935; *Bell System Technical Journal*, January, 1935.

New Cossor Sets

SPECIAL attention has been given to the design of the IF circuits in the new Cossor Model 395 AC superheterodyne to ensure quality of reproduction above the average. This set which costs 9 guineas is for medium and long waves only and has a triode output valve supplying an 8in. speaker.

A straight circuit, with pentode RF and detector stages and an output tetrode, is employed in the Model 390U at 6 guineas. The waveranges covered by this AC/DC set are 200-560 and 880-2,100 metres.

The Physical Society's Exhibition

A YEAR'S PROGRESS IN RESEARCH AND DEVELOPMENT

THE opportunity which the Physical Society's annual exhibition offers to the technical branches of the radio industry to display and discuss new developments in design and methods of measurement was once again seized with both hands alike by instrument manufacturers and works staffs. Held at the Imperial College of Science and Technology, South Kensington, on January 4th, 5th and 6th, the 28th Exhibition proved to be one of the most successful of the series, both as regards attendance and the quality of the exhibits. As usual, the organisation showed the close attention to detail which accords with the work of a scientific society.

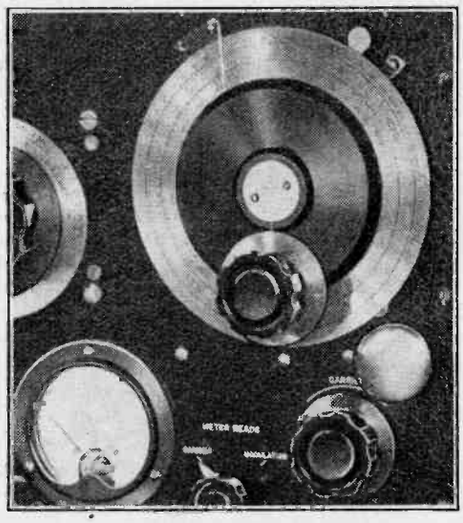

In the latest GR Type 605B signal generator an auxiliary condenser scale is provided for taking selectivity curves.

It is impossible in the space at our disposal to deal exhaustively with all the instruments shown, so we propose to note the directions in which changes are taking place, and to deal in detail only with those items which stand out on account of their novelty or general interest.

Measuring instruments naturally constitute the major part of the exhibit, and may be divided into primary standards for research and development, and into sub-standard instruments for production testing and servicing work. In the former category signal generators come first to mind. An extension of the frequency range to include short and ultra-short waves has become general, and the new instruments which have appeared show improvements also in other directions. In the new Marconi-Ekco Type TF430, for instance, modulation is applied to a separate RF amplifier to eliminate frequency modulation, and the input to the low impedance output attenuator is monitored by a valve voltmeter. Claude Lyons were showing a new GR signal generator, the Type 605B, which has an additional short-wave range of 30-50 Mc/s, and a new variable air condenser with a 20:1 slow-motion drive incorporating an auxiliary scale which should prove useful when taking resonance curves.

A surprising number of new precision bridges made their first appearance, a fact which indicates that there is a call for instruments designed for fundamental research into the design of components such as condensers, coils and valves. For inductance measurements a new precision direct-reading inductance bridge was shown by Sullivan, and Marconi-Ekco were demonstrating a precision valve bridge Type OA116, in which the anode resistance, mutual conductance, and magnification factor of any type of receiving valve could be measured directly under working conditions. A versatile circuit magnification meter (TF329), adaptable for dielectric loss measurements, was shown by Marconi-Ekco.

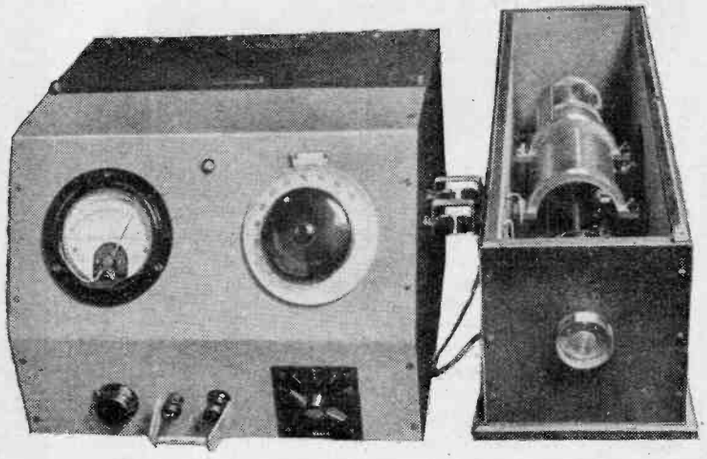

British Physical Laboratories' power factor and capacity limit meter with rotary condenser attachment for high speed testing of fixed condensers.

Among instruments designed for the production testing of coils and condensers two instruments shown by British Physical Laboratories are of special interest. The coil-matching unit is designed to indicate within pre-set limits, and incorporates a form of AVC which prevents damage to the meter while coils are being substituted. An electron tuning indicator is also incorporated to show that the coil contacts are complete. These features make for speed of operation, a factor which has been given first consideration in the power factor meter designed by the same firm. This instrument enables a simultaneous check of both the capacity limits and power factor of small fixed condensers to be made at speeds up to 2,000 condensers an hour. The basic principle involved depends upon the use of a rotary trimming condenser which may be adjusted to the required capacity limits, and which is driven at high speed by a small motor. This eliminates the necessity for resonance adjustments and shows a decrease of meter reading for both positive and negative capacity errors as well as for high power factor. The same instrument is adaptable for coil measurements and also for checking dust cores simultaneously for permeability and power factor.

Developments in beat frequency oscillators have been mainly in the direction of extending the frequency range to cover the frequencies met with in carrier telephony and television. The Marconi-Ekco BF Microvolter Type TF410 is a good example of this trend, and has a frequency range of 10,000c/s—3 Mc/s on a single dial.

Precision wavemeters specially designed for short waves were well in evidence, and the GR Type 620A, with a range of 10-20 Mc/s, is sub-divided into ten ranges with a 180° dial showing sub-divisions of 1 megacycle. A crystal-controlled oscillator provides har-

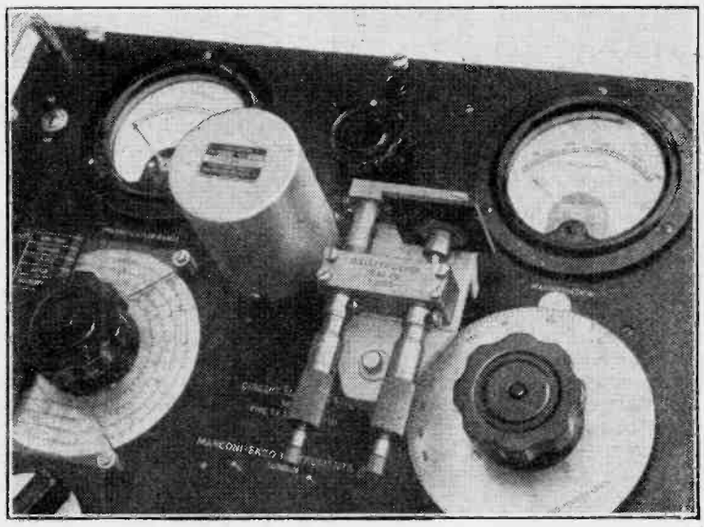

Marconi-Ekco circuit magnification meter (Type TF-329) with dielectric loss test jig.

The Physical Society's Exhibition—

monic checking points on each range, and the accuracy of the instrument is of the order of 0.01 per cent. The Marconi-Ekco Type TF388 is an instrument of similar scope, and incorporates an interpolation oscillator calibrated over a limited range for final adjustment.

Improvements in meter design include a more widespread use of aluminium-nickel-cobalt permanent magnets and an increase in the number of multi-range types. Examples include the new Type E772 Weston Analyser and the Simpson Universal Meter—the latter shown by Claude Lyons. Another interesting development was to be seen in the rectifier type meters for radio frequencies shown by Salford Electrical Instruments. As voltmeters these have a flat response from 30 c/s to over 1 megacycle, and as ammeters with special transformers for selected frequency ranges may be obtained reading up to 10 Mc/s, and for currents as high as 10 amps. The same firm was showing some interesting valve voltmeters, including a probe type for accurate high-voltage measurements at frequencies up to 100 Mc/s, and a miniature diode valve voltmeter with a self-contained filament dry battery and three ranges up to 100 volts. Probe type valve voltmeters, using acorn triodes for short-wave measurements, were also shown by Salford Electrical Instruments, Claude Lyons and Marconi-Ekco.

Among the cathode-ray exhibits one of the most spectacular was the Cossor double-beam tube in which separate phenomena may be compared simultaneously. Another important development represented on this stand was a circuit giving automatic brilliancy control in which the intensity of the spot is made proportional to the "writing" speed. Not only is this of great value in making uniform photographic records of transients, but it also serves to protect the fluorescent screen from damage. The display of cathode-ray components on the Ediswan stand included a useful accessory in the form of a vacuum switch for controlling high-tension circuits. Magnetically operated by an external coil, the switch is suitable for operating voltages up to 6,000 D.C.

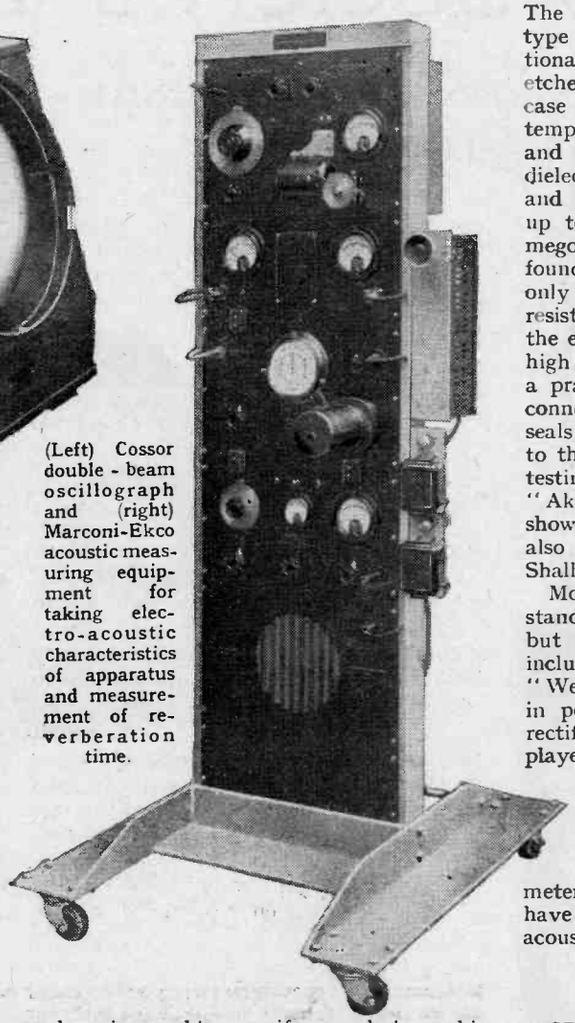

(Left) Cossor double-beam oscillograph and (right) Marconi-Ekco acoustic measuring equipment for taking electro-acoustic characteristics of apparatus and measurement of reverberation time.

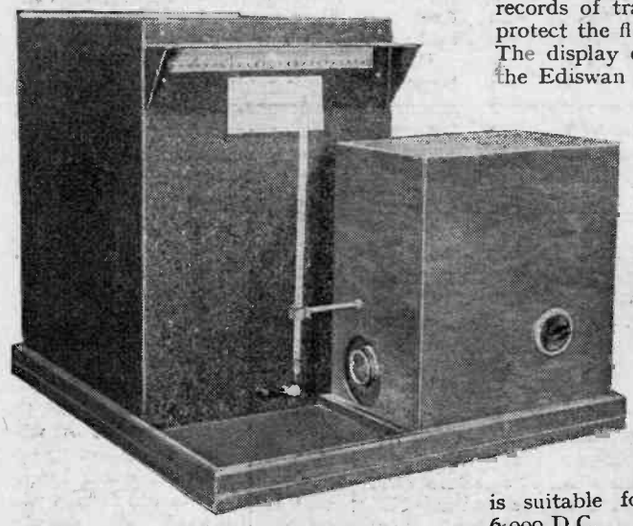

Demonstration arranged by Dubilier Condenser Co. to show low temperature coefficient of ceramic and metallised mica condensers. An "air-drier" in the box on the right directs a current of warm air on the condenser under test, and the stability of the capacity is indicated by a sensitive bridge.

Notable valve exhibits included the new Mazda miniature series on the recently introduced British octal base. British Physical Laboratories were showing an amplifying valve designed by Dr. Schneider for use in cathode-ray amplifiers and having a total harmonic distortion of less than 0.25 per cent.

Among firms representing the component industry the exhibit of the Dubilier Condenser Co. was one of the most interesting. Demonstrations were arranged to illustrate the low temperature coefficient of metallised mica condensers, and also the comparative working temperatures of the standard and "Drilitic" types of electrolytic condensers. The means by which the size of the latter type has been reduced were shown by sectional models and a micro-projection of the etched surface of the foil. Tubular metal case paper dielectric condensers for use at temperatures up to 70 deg. C. were shown, and other items included some new air dielectric trimmers for chassis mounting and glass-enclosed resistances for voltages up to 4,000 and in values up to 100,000 megohms. On the Erie Resistor stand were found some 1/10th-watt resistors measuring only ⅜in. long and ⅛in. diameter, and also resistances of the insulated type in which the ends are sealed by a special material of high tenacity. We were able to verify by a practical test that 20 SWG copper end connections would break before the end seals became detached. Of special interest to those who may wish to build their own testing instruments were the Shallcross "Akro-ohm" wire-wound resistors, also shown on this stand. These resistors are also available in decades including the Shallcross rotary instrument switch.

Most of the rectifiers on the Westinghouse stand were designed for industrial purposes, but a range of instrument rectifiers was included, and a method of using the "Westector" as a limitor for grid current in power amplifiers was shown. Contact rectifiers making use of selenium were displayed in the Standard Telephones exhibit.

Acoustical and allied subjects were represented principally by noise-measuring equipment, of which the GR Type 759A and the Marconi-Ekco Type TF397 portable noise meters were good examples. Marconi-Ekco have also introduced a comprehensive acoustic measuring equipment with which the reverberation times of buildings may be taken as well as the characteristics of all kinds of audio-frequency apparatus. Deaf-

GR Type 759A sound-level meter.

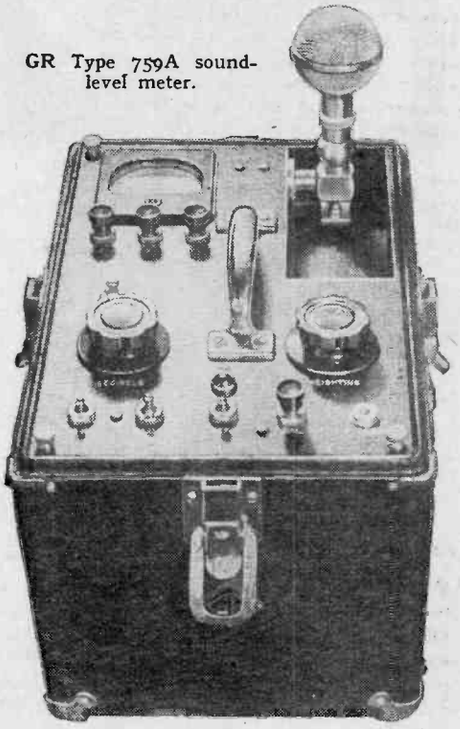

The Physical Society's Exhibition—
aid devices were again shown by Multitone and included a compact three-valve amplifier with tone control for use with a piezo microphone and operating from a "flexible" HT battery consisting of a number of long cylindrical units housed in a leather "cigar case" carrier.

In the Research Section the G.E.C. Laboratories were demonstrating the continuous sound spectrum method of measuring loud speaker response in which the thermal noise generated by a saturated diode is used as a source, and the resulting frequency spectrum explored with a selective analyser. Results in close agreement with open-air tests are obtained by this method in highly reflecting rooms.

Ediswan vacuum switch for controlling cathode ray high tension circuits.

Research work on cathode-ray tubes for television purposes included a demonstration by Ediswan of the effects of secondary emission from fluorescent screens and the use of special glass bulbs having the conductivity necessary to avoid distortion of the picture from this cause.

A prominent exhibit arranged by the Research Department of Marconi's Wireless Telegraph Co., Ltd., was a 40-kW. transmitter for 15-16 metres, showing the special water-cooled inductances and condenser contours required at these frequencies and powers.

There was something of interest for the narrowest of specialists in all branches of radio science, and it is small wonder that technical people from far afield make a point of travelling up annually for this exhibition.

Hints and Tips

Jelly-Acid Cells: Special Precautions

THEORETICALLY, we ought to recharge our accumulators when the voltage falls during discharge to 1.8 volts, but more often than not they are allowed to discharge beyond this, even to the extent of running right down. If the accumulator is of the free-acid type very little harm will be done by an occasional running down, provided no time is lost in recharging: any material dislodged from the plates will drop to the bottom of the cell when it is recharged, and there it will do no harm. The only effect will be that the cell has had its capacity reduced by a small amount.

When the cell is a jelly-electrolytic one, however, the position is much more serious. The scales which are formed when the plates are completely run down will not be able to fall to the bottom, but may cause a short-circuit between the plates. More cells of the jelly-electrolytic type meet their fate in this manner than in any other way. The moral is to charge regularly and frequently if the cell is to be kept in first-class condition, and not to wait until the cell shows signs of exhaustion.

Handle with Care

MENTION has sometimes been made of the danger of tapping valves too vigorously in an endeavour to locate such troubles as microphony, crackles, etc. Readers may be reminded that some types of barretter tube, although perfectly reliable in normal use, are even more sensitive to knocks than amplifying valves, and must not be expected to stand up to careless handling. For example, with at least one type of barretter, which closely resembles an ordinary electric lamp in construction, a mere fall of a few inches on to the work bench, or even a slight knock of the bulb against any firm object, is often sufficient to disintegrate the "works" completely; the reason being that the filament assembly is radially disposed around a central thin glass pillar, which promptly snaps off at the base when subjected to a sudden mechanical stress.

Erie Compensating Condenser

Designed to Prevent Frequency Drift in Pre-tuned Receivers

A NEW style of fixed condenser designed to have a predetermined temperature coefficient of capacity has been developed by Erie Resistor, Ltd., Carlisle Road, The Hyde, Hendon, London, N.W.9.

Known as the Compensating Ceramicon condenser, it consists of two condensers connected in parallel, both of which have ceramic material for the dielectric. In one the ceramic has a positive temperature coefficient, while in the other it has a negative coefficient.

By correctly proportioning the two capacities any temperature coefficient between the limits set by the individual characteristics of the materials can be obtained. Erie are prepared to design Compensating Ceramicons in capacities up to 100 m-mfds. with any desired capacity change between −0.9 per cent. and +0.36 per cent. for temperature changes between 30 and 60 deg. Centrigrade.

In condensers larger than 100 m-mfds. the limits of change between the temperatures mentioned can be set at between −0.9 and −2 per cent.

This style of condenser possesses the desired characteristics for use in pre-tuned radio-frequency circuits and, in particular, in the oscillator circuit of "push-button" type receivers, where the frequency must remain within certain predetermined limits irrespective of temperature changes in the set. The normal test voltage of the new Ceramicons is 1,000 volts DC, while the working potential is 500 volts DC.

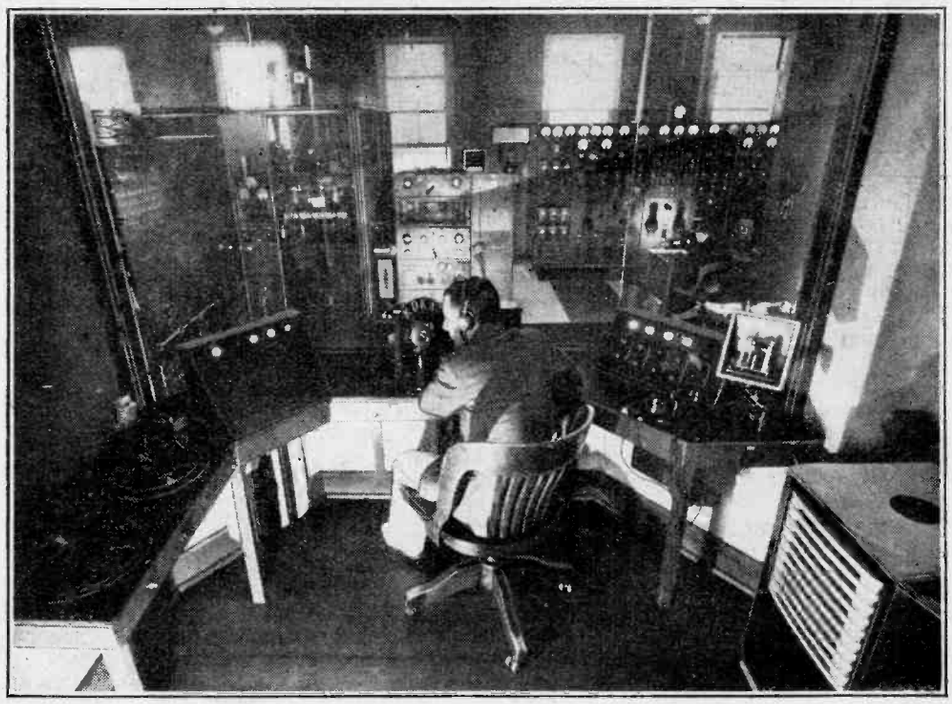

KDKA, the American station near Pittsburg, has been rebuilt after seventeen years of unfailing service, and the picture shows part of the new 50 kW transmitter as viewed through the windows of the control room. Working on a wavelength of 306.1 metres, the 718 ft. mast operates at three-quarters of a wavelength and this has been found to increase the efficiency above most existing standards.

TELEVISION AT THE CIRCUS

The Weak Radio Link

LAST week's transmissions from Bertram Mills' Circus at Olympia showed once again the vast possibilities of outside broadcasts. The O.B. squad was given every facility to aid them in this, their first circus relay. The three vans were accommodated amongst the farm carts and hay in one of the yards adjoining Olympia, the aerial being hoisted on one of the adjacent buildings.

A Super-Emitron, mounted on its trolley, was accommodated in one of the tunnel entries to the ring, while Freddie Grisewood and his seventeen-year-old "television niece," June Myles, were viewing the show from two seats amongst the audience at the back of the hall, where an ordinary Emitron was used to televise the commentators. This was incidentally June Myles' first appearance before a television camera.

Not Up to Standard

The quality of reception on the first two days was certainly not up to the standard set by the transmissions from the film studios, but a very considerable improvement was effected on the following days.

The trouble was associated with the radio link and is undoubtedly due to the extremely high gain necessary in the receiver for reception at such a distance (10 miles). This distance could have been greatly reduced by placing an ultra-short-wave receiver at the nearest point possible on the existing circuit of the television cable. The signal received would then have been stronger and it would not have been necessary to use such a high-gain receiver, and the resulting signal passed on via the cable to Alexandra Palace would have had a much better signal-noise ratio.

TRANSMITTER-RECEIVERS were recently put to an unusual application by Cinesound Productions in Sydney. Movements of sailing craft being filmed from the coast were directed by the producer, who was in constant radio communication with them. The pictures show engineers sending and receiving instructions by means of the very compact apparatus manufactured by Amalgamated Wireless of Australia; it operates on a wavelength of 5 metres and has a range of 20 miles.

ARABIC BROADCASTS

WITH a reticence that is probably not unassociated with the international broadcasting position, the B.B.C. is showing a marked vagueness as regards the official reports which have been received of reception of the Arabic broadcasts.

The engineers are, however, satisfied that throughout the Near and Middle East the British bulletins are better heard than the Italian, and no interference has yet taken place other than that due to natural causes.

Major importance is attached to the quality of reception in Egypt, and appreciative reports are being received from Cairo.

While the engineers are devoting a large percentage of their time to the new service, Sir Noel Ashbridge has declared that he intends to carry the burden without prejudicing the Empire service in any way.

NEWS OF

MORE WAVELENGTHS FOR BROADCASTING ?

Arguments at Cairo

THE B.B.C. will be in the forefront at Cairo in urging the allocation of more wavelength channels for broadcasting, necessarily at the expense of the countless other radio services. Everybody knows that the wavelengths in general use range from a few centimetres to 20,000 metres, but how many people pause to consider the relative importance of the services which use them?

They include, besides the naval, military, and air forces, the civil air services, air beacons, mercantile marine, international radio telephony, commercial telegraphy, and picture transmission. All these services, valuable though they are, have been considered sacrosanct in the matter of wavelengths, while broadcasting has been looked upon as something comparatively frivolous. This point of view may have been justified in 1927, when the Washington Conference defined the broadcast bands on the medium and long waves; it is quite wrong now, when broadcasting exerts a mighty power in national and international affairs, and this point will be emphasised at Cairo.

Demand for Short-wave Plan

The formation of a *Plan* for the short waves will also be demanded. Here there is literally no limit to the *number* of stations permitted to work within the allotted wavebands, and the congestion grows worse from week to week. Take as an example the 49-metre band, on which nearly 150 stations are expected to work sooner or later. More than fifty have already worked on this band, and thirty-seven are operating regularly, despite the fact that only fifteen can comfortably be accommodated without mutual interference. Actually, the whole of the existing short-wave broadcasting bands comprise only ninety-one wavelength channels.

The B.B.C., with its expanding Empire services, is seriously concerned with the situation.

New Developments at Daventry

Within a week or two work will begin on the new B.B.C. Empire transmitter buildings at Daventry. The contract is in the hands of Henry Martin, Ltd., of Northampton.

NEWS BULLETINS

The Press Wins

AS the result of an agreement between French private stations and the Federation of French Newspaper Proprietors, definite limitations have been imposed upon broadcast news. Practically no extracts from the newspapers may be quoted in future before 1 p.m. in the case of morning papers and before 10 p.m. in the case of evening papers. These bulletins are not to exceed periods of ten and fifteen minutes respectively.

All stations have been accorded the *privilege* of two daily complimentary news transmissions not to exceed a total of a quarter of an hour in all, as well as two news flashes edited by the Federation.

LONDON TO DELHI ON 7 METRES

Alexandra Palace Signals Heard in India

THE following is a summary of a report recently issued to the Indian Press by the research engineer at the Receiving Centre of All-India Radio in Delhi:

During one of the regular observation periods carried out daily at the Receiving Centre in Delhi, the sound programme from Alexandra Palace, London, was for the first time received quite clearly. The sudden appearance of signals on

THE WEEK

this very short wavelength was not unexpected, as it has occurred during that part of the year when conditions in the ionosphere are most favourable for long-distance propagation of the ultra-high frequencies. It occurred when the entire path between sending and receiving stations was in daylight.

Another factor particularly favourable to this reception is that the maximum of the eleven-year cycle of sunspot activity is now being reached, and these ultra-high frequencies may be expected to be audible at unusually great distances. After 1939 such good reception will gradually become less frequent until, during the sunspot minimum in 1944-45, reception at abnormal distances is not likely to occur.

FRENCH TELEVISION

Four Systems in Use

FRENCH television transmissions which are now taking place are conducted with four different systems! That of the Compagnie Française Thomson Houston has 455 lines and 25 complete pictures a second interlaced to give 50 frames. The mode of scanning and the slope and timing of the sync pulses are similar to those adopted in this country. Positive modulation is used and the DC component is retained.

The system of the Société Radio-Industrie has the same number of lines and frames, and the modulation is positive, and includes the DC component. The frame sync pulses are of somewhat different slope, however.

The Compagnie Française de Television use 450 lines and 50 interlaced frames. Negative modulation is used, and the mean carrier amplitude is maintained at a fixed value. Interlacing is secured by varying the timing of the sync pulses on successive lines.

The fourth system, that of the Societe d'Applications Telephonique, uses 375 lines and 50 interlaced frames per second. Positive modulation with the retention of the DC component is used. The sync pulses are similar to those of other systems, but the duration of the line sync pulses is only 6 per cent. of the line.

The transmissions carried out on January 13th, 14th and 15th will be by the system of the Compagnie Française de Television, and will take place from 4.15 p.m. to 5.30 p.m.

Cable Distribution

New television transmitters at Toulouse, Bordeaux, and Limoges are to be fed with programme material from Paris by means of a special underground co-axial cable which is being laid by French Post Office Engineers. The use of the cable, the frequency response of which is maintained to 4 megacycles, is not confined to television; it is also suitable for multi-channel telephone and sound broadcast transmission.

WORLD'S CHAMPION LISTENER

Trophy Comes to England

THE first person outside the American Continent to win the trophy awarded by our New York contemporary, *Short Wave and Television*, for the biggest list of SW stations logged during the month, was last week presented to Mr. F. Lanaway, of Edmonton. On a two-valve set built by himself he logged 152 foreign short-wave transmissions during August, 1936. He has been given a post, for he was unemployed, by Peto-Scott, who are to market a receiver designed on the circuit of his "world beater."

CALIFORNIAN SW TRANSMITTER

Choice of Frequencies for Day and Night Working

PERMISSION to erect the first international short-wave broadcasting transmitter west of the Mississippi, at Belmont, California, has been granted to the International General Electric Company. The station, which will operate on 9,530 kc/s (31.48 metres) and 15,330 kc/s (19.56 metres), should be completed and radiating at the end of this year. The two frequencies to be employed are those which have been used for years by W2XAF and W2XAD, both well known to English listeners. Because of the difference in times of transmission it will be possible to share the wavelengths with the two Schenectady stations without interference.

The station will be equipped with directional aerials of the latest type, with beams directed to the Far East and South America. These beams, concentrating the transmitter output of 20 kW within an angle of about 30 degrees, provide a signal gain of about 300 per cent. over the ordinary aerial.

Earth's Magnetic Field

In order to serve the Far East, the signals from the existing international broadcasting stations in the eastern part of the United States, following a great circle path, must pass directly over the north polar regions. The magnetic field of the earth and the daylight-darkness distribution over this path are subject to extreme variations, and their effect on radio signals is believed to be the cause of the failure of radio transmissions to the Orient, and has prevented a reliable broadcast service from the United States.

The great circle path, however, from the proposed station in Belmont does not pass over the north polar regions, but is a more east-west path, and therefore should not be subject to the extreme variations as is the case with transmissions from Schenectady, New York. This indicates that it should be possible to render a satisfactory and reliable broadcast service to the Far East from Belmont throughout the greater part of the year.

The 9,530-kilocycle frequency will be used when the path between the transmitter and listening points is entirely dark, while that of 15,330 kc/s is stated to be most useful when the path is part light and part dark.

TELEVISION AT A HUNDRED MILES

PROGRAMMES transmitted from Alexandra Palace, London, are being regularly received at Solihull, Warwickshire, on a television receiver designed by Mr. W. R. Parkinson, Technical Director of the Radio Gramophone Development Company.

Good reception is also reported from Norwich where the first high-definition receiver is now operating. The owner, Mr. C. W. Willmott, uses an aerial 65 feet high.

Towards the end of last year successful experiments on long-

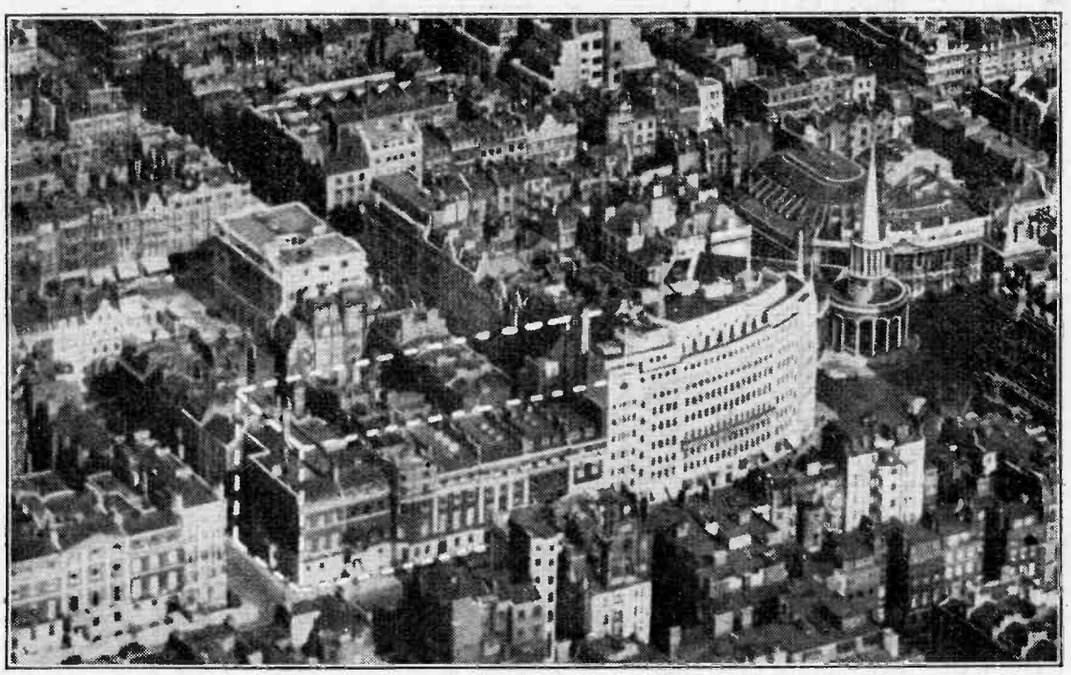

THE EMPIRE'S RADIO CENTRE. The proposed extension of Broadcasting House is indicated in this aerial view by dotted lines. With the present growth of wireless and television it can well be imagined that the radio centre of the future will embrace the whole square of which the present headquarters forms but a corner.

News of the Week—

distance television were carried out at the Moston Works of Ferranti, approximately two hundred miles from the London transmitter.

RAILWAY INTERFERENCE

A Travelling Laboratory

FEW forms of interference are more annoying or harder to suppress at the receiving end than that produced by electric trains, and so it is particularly gratifying to hear that the German State Railways have recently put into service a rail coach built and equipped with the sole object of investigating interference caused by the various electrical machinery for which they are responsible. The instruments fitted in the car are calibrated to C.I.S.P.R. standards, and they record graphically on a paper tape the "annoyance value" (and not merely the field strength) of interference; in other words, an attempt is made to relate the disturbances, as they would be heard *via* a loud speaker, to the normal reactions of the ear.

One of the first-fruits of investigations carried out with the help of the car is stated to be the substitution on German electric lines of carbon collectors in place of the metal types which were responsible for heavy interference. So successful has the vehicle proved that both Swiss and Dutch railways have applied for the loan of it for investigating troubles on their own systems.

FARR - BRADDOCK FIGHT

THE broadcasting of the Farr-Braddock fight on the morning of January 22nd will keep a big B.B.C. staff out of their beds. The Droitwich transmitter will have to be "warmed up" by 3.0 a.m. to take the commentary, and there will also be a team of engineers on duty at Maida Vale, where a tape record will be taken for re-broadcasting Nationally at 6.45 on the same evening.

Mr. "Bob" Bowman, of the Canadian Broadcasting Corporation, is giving the commentary, not because the N.B.C. description of the fight is likely to be unacceptable, but because it is part of a sponsored programme, which the B.B.C. is not permitted, by its Charter, to relay.

RAIDS ON RADIO RECEIPTS

FRENCH listeners who furnish all the radio receipts in the shape of directly paid licences are disconcerted by the State drawing upon the Wireless Fund for purposes that are "non-radio." The Education Commission of the French Chamber proposes that the 22 million francs necessary for reorganising the National Lyric Theatres in Paris should be secured by raising the duty on valves, and the Finance Committee, attracted by the project of valve taxation, decided that 60 per cent. of the duties should go to the general budget. This measure, which will involve 40 million francs of extra taxes, having been carried in the Chamber of Deputies, only awaits the approval of the Senate.

TELEVISION PROJECTION SCREEN

VERY finely woven artificial satin impregnated with a solution of thorium and uranium is used for a new television screen, the patent for which has just been granted by the Patent Office in Washington, U.S.A. When the material is used as a projection surface it gives a very clear picture produced by the incandescence of the screen.

The co-patentees of this latest development in projection screens for television are Philo T. Farnsworth, the well-known American television expert, and Bernard C. Gardener.

NEWS REEL PRODUCTION

TELEVISION has already provided "backstage" film information which is rarely available to the public, and during the first week of February the mobile unit will spend a day with a news reel company. The television cameras will survey the whole process from the time a news flash is photographed until it appears, duly cut and edited, on the screen.

FROM ALL QUARTERS

Pioneer Honoured

THE 93-year-old pioneer of wireless, M. Edouard Branly, especially well known for his work in the development of the coherer, has been awarded the Cross of the Legion of Honour.

Unstable Transmitters

OUT of all the European broadcasting stations, only eleven had deviated from their allotted wavelengths by more than 20 cycles. The worst offenders amongst these had drifted from their correct frequency by about 100 cycles.

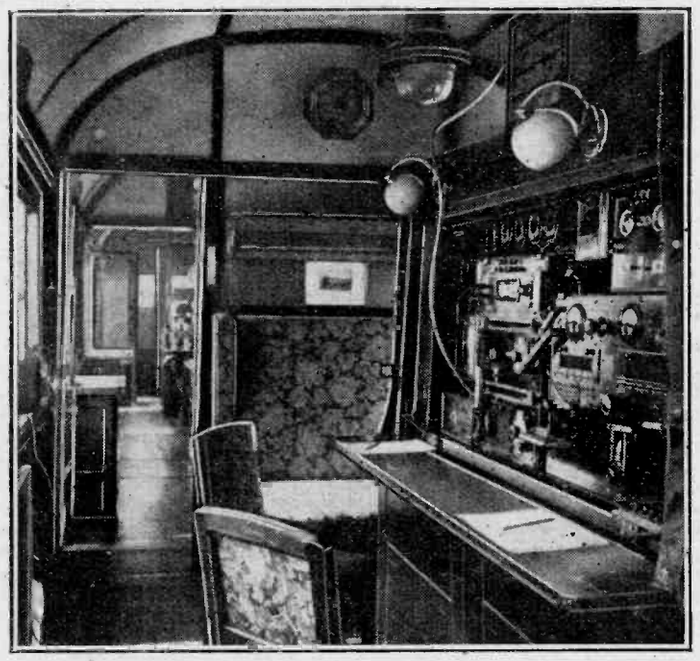

TRACKING INTERFERENCE on the German State Railways; this photograph shows part of the measuring apparatus installed in a special rail coach with the object of investigating electrical interference.

Paris Exhibition Not to Re-open

THE work of demolishing the buildings of the Paris International Exhibition will begin shortly. It is expected that the Radio Pavilion will be preserved and used as a television centre.

Re-union Dinners

R.A.F. ELECTRICAL and Wireless School (one-time No. 1 "T" Farnborough and Flowerdown) is to hold an Officers' Re-union dinner at the R.A.F. Club, 128, Piccadilly, at 7.30 p.m. on January 22nd. Those interested, please write: F.-Lt. Wainscot, Cranwell, Lincs.

The annual dinner and re-union of the Institution of Electrical Engineers will be held at Grosvenor House, Park Lane, W.1, on February 10th at 7 o'clock. Applications for tickets, which are priced 12s. 6d., should be made to the I.E.E. Secretary, Savoy Place, Victoria Embankment, W.C.2.

The Gallipoli and E.E.F. Signal Officers' re-union dinner will be held at the Piccadilly Hotel, London, W.1, at 7 p.m. to-morrow (Friday).

H.M.V. Showrooms

TEMPORARY showrooms at 104, New Bond Street, London, W.1 (Mayfair 5702), have been taken by H.M.V. while their premises in Oxford Street which were destroyed by fire are being rebuilt.

Ismay Buys Cossor

NEGOTIATIONS which have been in progress for the past five weeks have now been completed, and the purchase of the whole of A. C. Cossor by Ismay Industries was recently announced to shareholders.

Radio Exhibitions

THE first wireless exhibition this year will be the Exposition of Wireless Components in Paris from February 1st to 4th. Radio will occupy an important place in the annual Music, Gramophone and Cinema Exhibition, to take place during the Paris Fair, from May 21st to June 16th.

"Cathedral" Studio

CZECHO-SLOVAKIA'S station at Bratislava has just been augmented with several new studios, two of which have been treated acoustically to give an open-air effect and the atmosphere of a cathedral.

Spanish Tax on Receiver Sales

GENERAL FRANCO'S *régime* in Spain is levying a 5 per cent. tax on the retail price of all wireless sets sold. Loud speakers sold separately are taxed at the same rate.

Italy

LICENCES.—On December 1st the number of licence holders in Italy stood at 795,000, showing an average annual increase of 81,333 during the past six years.

COMPARISONS ARE ODIOUS.—A wireless licence in Italy costs lire 85 (17s. at current rate of exchange), and is paid to E.I.R.A., the broadcasting company, whose total outlay to Government Ministries is 11.11 per cent. of its funds. The B.B.C. receives from the Government 75 per cent. of each licence fee.

NO PIRATES.—Radio dealers in Italy keep a register containing names and addresses of everyone purchasing receiving sets or components, in order that the broadcasting authorities can ascertain whether or not the full number of licences are in force.

A GOOD EXAMPLE.—In Italy all schools and places of learning, hospitals, homes, and all organisations allied to the people's welfare are exempt from taking licences for wireless receiving sets. A similar scheme might well be adopted in England for schools and hospitals.

Readers' Problems

A Selection of Queries dealt with by the Information Bureau, and chosen for their more general interest, is published.

Volume, Real and Apparent

ONE or two querists have recently complained that the volume obtained from their sets appears to be less on gramophone than on radio. In each case the receivers in use are theoretically capable of giving the same output on either form of reproduction, and one is inclined to suspect that the pick-up characteristics may be responsible. Apparent volume, as judged by the human ear, depends chiefly upon acoustic output in the middle register, and, if the pick-up over-emphasises either or both extremes of the frequency range, overloading might be caused, although apparent volume would remain low.

Silencing a Vacuum Cleaner

CONDENSERS of the values commonly used for interference-suppression purposes on fixed electrical machinery are not necessarily suitable for unearthed appliances such as vacuum cleaners. A breakdown in insulation between the electrical circuits and the metal framework might cause an unpleasant (or even dangerous) shock to the user if condenser capacity were too high.

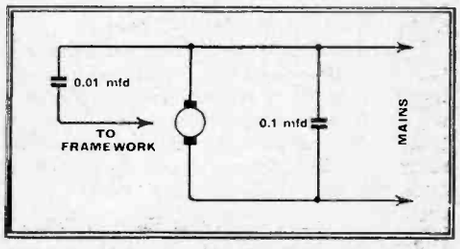

Fig. 1. Type of condenser suppressor generally used on vacuum cleaners or similar portable electrical appliances.

To a correspondent who asks for a circuit for suppressing an unearthed vacuum cleaner run on AC mains, we suggest the condenser filter shown in Fig. 1, which represents the standard arrangement customarily recommended. The capacity values given should not be exceeded.

Valves for the 2-RF Straight Set

READERS who propose to substitute valves other than those specified in the RF stages of this set are reminded that their mutual conductance should not be appreciably greater than that of the types used in the original instrument. Otherwise, it may be necessary to over-bias the grids in order to obtain stability. It is still more important that the valves should have top grid connections, as otherwise it will be difficult to maintain stability without making drastic alterations to the layout.

Interaction between Medium-wave Nationals

THE general rule is that quality of reproduction is better on medium- than on long-wave broadcasting. A correspondent who has always held this view has recently moved into the country, and now finds that the quality of his nearest medium-wave National transmitter is always markedly inferior to that of Droitwich. No heterodyne interference is noticeable, but our querist wonders whether the trouble is due to some other form of interference from foreign stations.

We would remind him that he is now really outside the service area of any medium-wave station, and, moreover, that his nearest "National" shares its wavelength with another station at a distance from him that is very little greater. However perfect the synchronisation between these two stations, there is a distinct probability of interference and distortion under such conditions, and nothing that he can do will prevent it. Here is a case where Droitwich must be regarded as the local station.

Reflex Drawbacks

IN the early days, when the price of valves ran into pounds, reflexing was naturally attractive, and an opportunity of making a valve do two jobs simultaneously could hardly be missed. Now, however, circumstances have changed, and it is only in a few specialised cases that the principle can be advocated. Those who have written to us on the subject are reminded that nowadays the crude filtering arrangements which were once used to separate audio- and radio-frequency currents would no longer be tolerated; the elaborate filtering that we would require nowadays might well cost much more than the valve that it would replace.

Even on the score of compactness, a reflex set is hardly likely to score, as the components necessary for the filtering circuits would probably take up more space than a valve. A saving in valve current is admittedly one of the advantages, but the type of valve that is usually reflexed is by no means extravagant in its consumption.

Night-time Interference

EXCEPT at extremely short distances from the local station, it is seldom that one can count on completely interference-free reception, at any rate when using a real high-quality receiver covering a wide audio-frequency range. A reader who has recently built a set of this type is entirely satisfied with its daytime performance, but is annoyed to find that an almost continuous high-pitched whistle manifests itself after dark while the set is tuned to the local station.

Such an experience is by no means abnormal, and here is a case where some form of whistle suppression or variable selectivity is clearly desirable. Our correspondent must perforce satisfy himself with a lower standard of reproduction (so far as high notes are concerned) at night-time. Obviously, the field strength of the foreign station in the adjacent channel is subject to a regular increase at night. A consoling thought is that the interference will become less troublesome as the days lengthen!

Introducing AC Hum

PROBABLY for psychological reasons, a trace of AC mains hum is more annoying to most listeners than many other and intrinsically more disturbing forms of background noise. One feels that there is no excuse for hum in a modern receiver; that is probably why a querist is so disturbed to find the fitting of tone control to his set has brought up the background of hum to the level of audibility.

From the rough circuit diagram submitted, we see that the tone-control arrangement includes a high-inductance air-cored coil, presumably of about ¼-henry. It should be emphasised that such windings are particularly likely to pick up hum potentials. In all probability a position for the coil at which the trouble will disappear can be found experimentally. At any rate, the experiment is easily carried out by temporarily connecting the coil with longish flexible leads.

Straight Sets for Short Waves

IN reply to a number of querists, it may be stated that the straight sets recently described in this journal may best be adapted for short-wave reception with the help of a converter. It is not recommended that any attempt should be made to modify them by the addition of a short-wave range or ranges. This applies to all similar sets; the "straight" principle has advantages on medium and long bands which have recently been discussed in our columns, but the amount of selectivity that is now necessary on the short-wave broadcasting bands can be obtained much more easily and economically by recourse to the superheterodyne principle.

Simple Anti-Interference Measure

THE owner of a small DC motor (which is used for driving a lathe), has heard of an arrangement of the field coils which is claimed to reduce the radiation of interference. He asks whether we can give him any information on the subject.

Assuming that the motor is series-wound (i.e. with field coils in series with the armature), it is probable that a simple alteration will reduce the radiation of interference.

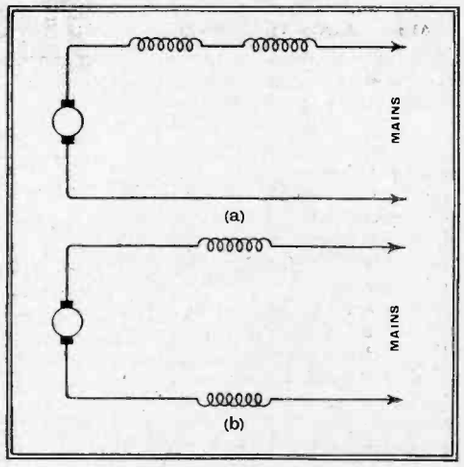

Fig. 2. The field coils of a series-wound motor are usually connected as in diagram (*a*); by re-arranging them as in diagram (*b*), they are made to act as RF anti-interference chokes.

Normally the field coils are connected as in Fig. 2 (*a*). By re-arranging them as in diagram (*b*), with one coil on each side of the brushes, the bad effects of commutator-sparking are reduced, due to the fact that the coils now act as RF chokes and prevent interfering impulses generated by the sparks from passing out to the wiring.

Re-arrangement of the coils in the manner described should have no adverse effect on the operation of the motor.

Random Radiations

By "DIALLIST"

This Valve Business

NOT long ago, when commenting on the multiplicity of types of wireless valves made and sold in this country, I suggested that there were now far too many of them and that as time went on the American series might well supersede all others. Since I wrote that I have been asking questions here and there and here's the truth of the matter, so far as I can discover it. The most important of our valve-making concerns are linked together in the British Radio Valve Manufacturers' Association, generally known for short as the B.V.A. Unlike birds in their little nests, the B.V.A. members don't agree. There are no fewer than four distinct groups, each holding strongly its own ideas about valve technique. You mightn't think that on such a question as many as four different lines of thought were possible. They are, though! Some believe that the British technique is the best for all concerned; others plump for the Continental; others, again, for the American, and yet others for a technique independent of all these. In the United States, on the other hand, there is only one school of thought about valves, which simplifies things not a little over there.

Is Agreement Possible?

When you come to think of it, it is rather sad that our valve makers can't agree to adopt one technique as the standard and unite in going all out to develop it. The simplest solution—to my mind it's the one that's bound to be adopted sooner or later—would be to standardise the American technique in this country. After all, competition by the U.S.A. is fierce in this country and in most parts of the Empire. We import American valves by the million each year. The only way to hold our own seems to me to be to make valves of the same kind which are equally good and to sell at similar prices. We could probably do that if all our firms got together and ceased to dissipate their energies in the production of more than nine hundred different valves. There are, I believe, about four American valve-making concerns, each of which has an annual output as great as that of the whole of our valve industry. Still, we could meet them on their own ground and build up a vastly increased valve business if we standardised as they have done.

Huna London

THOSE words, which they tell me mean "London Calling," or something like that, introduced the first Arabic broadcast from Daventry on 31.32 metres the other night, the transmitter presumably being GSC. Very wisely the B.B.C. arranged for several important men in the Arabic-speaking world to give the new service a send-off and the inaugural programme attracted a great deal of attention throughout the Near East. Reception seems to have been good on the whole in the entire area for which it was chiefly intended. From time to time there was interference from another station, but there was no suggestion that this was intentional. It seemed to me rather a mistake to include European music in the broadcast, for Arabs in the main appreciate it just about as little as we appreciate their music; you may have had a sample of that from time to time from the French North African stations. I am not suggesting that the B.B.C. should start an Arab orchestra! Probably a carefully made selection of gramophone records would do all that is needed.

Out of the Frying Pan . . .

One thing that does strike me about the Arabic broadcasts is that unless the B.B.C. exercises consummate tact they may lead to the dropping of more bricks and to the raising of more criticism than all the rest of its transmissions put together. Apparently, there was something of a *faux pas* in the first programme: listeners in Palestine thought that the news item about the execution of an Arab was not in the best of taste. Very great care will have to be taken to see that things of this kind just don't happen. There must also be no tendency in the broadcasts to harp overmuch on the line we take in world affairs, no matter how strongly we may believe that we are right. To the Eastern mind anything like over-emphasis is liable to suggest that you don't yourself quite believe what you are trying to make others believe.

No Radio War

I have seen it suggested in some quarters that if other countries persist in broadcasting unfriendly propaganda stuff about us we should retaliate by giving them some of their own medicine in our Arabic transmissions and, later on, in those in Portuguese and Spanish. I don't think that we shall do anything of the kind, and I sincerely hope that we shan't. The purpose of our broadcasts is to tell the truth in plain, unvarnished news bulletins. That is admirable, but anything like an international slanging match in the ether is a prospect too horrid to contemplate. Somehow, I can't help feeling, when all's said and done, that it is a pity that we were ever forced into this propaganda business. One never knows what it's going to lead to or where

Broadcast Programmes

FEATURES OF THE WEEK

THURSDAY, JANUARY 13th.

Nat., 6.40, From the London Theatre: extracts from "This Monkey Business." 7, The Bach Family—III. 7.30, "Whoopee Paree": variety.

Reg., 7.30, Victorian Negative: a portrait of Samuel Butler. 8.15, The Royal Philharmonic Society's Concert, the Orchestra conducted by Leslie Heward

Abroad.

Eiffel Tower, 8.30, Operetta Soirée.

FRIDAY JANUARY 14th.

Nat., 6.25, George Formby in "A Lancashire Lad in London"—II. 6.40, The Bach Family—IV. 7.15, Teddy Joyce and his Band. 8, An Incident in the scramble for Africa—"Fashoda."

Reg., 8, Variety from Hull. 8.30, British Ballet Music. 9.15, "The Princess of Paraphernalia": radio farce.

Abroad.

Brussels, 8, Adaptation of "Journey's End."

Vienna, 8, English music by the Vienna Symphony Orchestra conducted by Albert Coates

SATURDAY, JANUARY 15th.

Nat., 6.30, Talk on Sport. 6.45, Band of H.M. Grenadier Guards. 10.40, "Look Back 200 Years."

Reg., 7.30, Bach Family—V. 8, Speeches of the First Earl of Birkenhead. 9.20 "Angela Abroad."

Abroad.

Berlin, 7, Light orchestral programme—"From the North Sea to the South Seas."

SUNDAY, JANUARY 16th.

Nat., 6.15, Selections from a sailor's diary of 100 years ago. 7, Social Lecture by John Cheatle: "Manners Makyth Man."

Reg., 6.30, Orchestral Concert—14. B.B.C. Orchestra conducted by Willem Mengelberg. 7.55, Service from Manchester Cathedral. 9.5, "James Legacy": a comedy by Eden Phillpotts.

Abroad.

Leipzig, 6.10, Wagner's "Lohengrin."

Berlin, 7, Bizet's "Carmen" with Helg Roswaenge as José.

MONDAY, JANUARY 17th.

Nat., 7, Monday at Seven. 8, Organ recital from St. Margaret's, Westminster. 10.5, "Forgotten Rivalries"—second series, No. 1.

Reg., 7.30, Egon Petri, pianoforte. 8, "The Pig and Whistle"; a rural episode. 9, Orchestral Concert from Edinburgh.

Abroad.

Kalundborg, 7, Musical feature "England from Shakespeare to Charles II." 10.15, Ravel Commemoration Concert.

Radio Paris, 8.30, Concert of the 1914–18 Authors' and Composers' Association.

TUESDAY, JANUARY 18th.

Nat., 6.55, The Erith British Legion Band. 8, Musical comedy "At Your Service, Madam." 9.20, John Hylton: "How I Began."

Reg., 7.30, Scottish Dance Music. 7.50, An anniversary visit to R.R.S. *Discovery*. 9, Teddy Joyce and his Band.

Abroad.

Eiffel Tower, Lyons and Bordeaux, 8.30, Honegger conducting his Oratorio "King David."

WEDNESDAY, JANUARY 19th.

Nat., 7, Egon Petri, pianoforte. 7.30, "London Pie," a revue. 8.15 and 9.30, B.B.C. Symphony Orchestra—IX, conducted by Willem Mengelberg.

Reg., 6, Theatre Music by Alfred Reynolds. 8.15, A Musical Feature, "The Band Waggon." 9, "The Case of Lady Talond," a play by Norman Edwards.

Abroad.

Leipzig, 8, Sibelius concert.

Milan, 8, Bizet's "Carmen" from La Scala.

it will end. Some countries, for instance, regularly jam the broadcasts of others whose political views they don't like. An unholy mess could be made of the short waves if deliberate jamming became more widespread. It's much to be regretted that the politicians ever got their fingers into the wireless pie.

Frequencies and Field Strength

IN his interesting article on field strength during daylight and darkness in *The Wireless World* of December 30th, 1937, "Cathode Ray" showed conclusively that the higher a station's frequency (or, if you prefer it, the shorter its wavelength) the smaller is the distance at which fading is liable to occur. This is one of the chief reasons why all the European broadcasting authorities are so keen on getting hold of wavelengths above 300 metres, and much higher than that if it can be managed. The best part of the medium waveband is probably the region between about 350 and 450 metres, for there you don't get, as a rule, pronounced fading at short ranges and there is little or no interference from spark transmissions. As you rise above 450 metres the range at which field strength is good after dark increases, but so also does the trouble caused by broadly tuned spark transmitters.

But it is rather interesting to note that when you come to really big distances the optimum wavelength for medium-wave broadcast reception is somewhere between about 230 and rather over 350 metres. Turn back the pages of your log recording reception of North and South American stations, and you will, I think, find that there are very few entries concerning stations working on wavelengths above 400 metres. On the other hand, you will find that stations such as WHAM, WPG, WTIC, WIOD and KDKA make very frequent appearances. How often have you logged WLW? This station, with a 500-kilowatt plant and a highly efficient vertical radiator, works on 428 metres. In my experience, it is very seldom heard at anything like the strength of less powerful stations on lower wavelengths until the small hours of the morning have turned into such big ones that they mean getting up early rather than sitting up late.

The Radio Industry

EKCO announces that receiver prices as at present in force will be maintained throughout the present season.

Holiday and Hemmerdinger have introduced a double-size bottle of their cellulose cement for repairing speaker cones and coils, etc. The price is 2s.; postage 6d. extra.

A. F. Bulgin and Company, Ltd., have produced a new style of valve-holder (Type VH56) for the British Octal base, recently introduced by Mazda.

Mr. Robert J. Robb has been appointed by Belling and Lee as sales engineer for the West Midland area (including Birmingham).

Grampian Projector Speaker

THE construction of the Type PVH permanent-magnet unit used in this horn-type loud speaker differs in many essentials from established practice and is particularly well adapted for rapid replacement of the diaphragm "on location." The seamless moulded bakelite diaphragm is clamped directly to the top pole-piece of the magnet and is independent of the head casting forming the throat. Relative movement between the head and the magnet cannot, therefore, affect the diaphragm alignment, and centring can be carried out with the diaphragm completely exposed. Special attention has been given to the reliability of the lead-out wires, and contact with the terminals is effected by strong plated springs.

Tested with the 42in. horn, which is a two-piece structure with cast and spun sections, the speaker gave extremely good diction on speech, and music of good clarity and attack with as much bass as can be expected from a horn of this size.

Exploration of the frequency response with the heterodyne oscillator showed the output to be smooth in the critical region between 200 and 2,000 c/s. A trough in the vicinity of 5,000 c/s was noted, but the output showed a tendency to increase above 7,000 c/s. The effective "cut-off" is somewhere between 150 and 180 c/s, but a 6ft. horn is available for use when music is of greater importance than speech.

The tests were made immediately after a baffle-type cone loud speaker, a circumstance which served to emphasise the high electro-acoustic efficiency of the horn unit and to lend credence to the maker's figure of 45 per cent. The maximum continuous loading for the 42in. horn is rated at 10 watts, and for the 6ft. horn 15 watts with peak powers of 18 and 35 watts respectively.

Workmanship and finish, particularly in the machined parts, are excellent, and the care which has been taken to prevent the ingress of moisture to the coil should ensure reliability under all weather conditions.

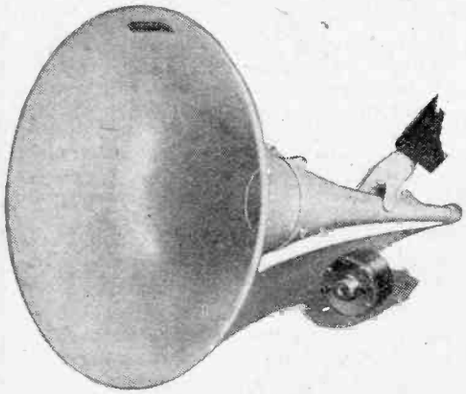

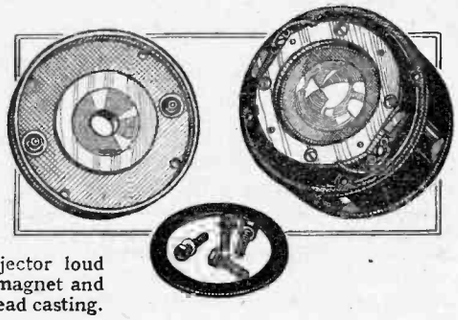

In the Type PVH unit used in the Grampian projector loud speaker the diaphragm is assembled directly on the magnet and can be replaced and centred independently of the head casting.

McCARTHY

6-valve all-wave Superhet with Radio Frequency Stage

8 stages.
8 tuned circuits.
3 wavebands.

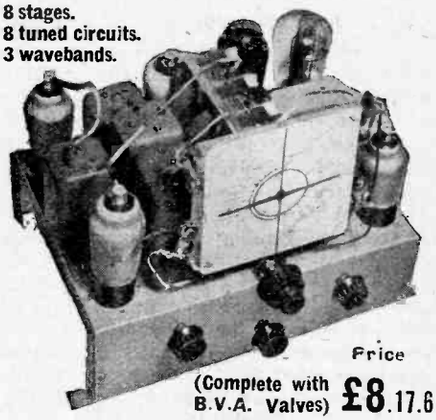

Price (Complete with B.V.A. Valves) £8.17.6

Performance (made possible by use of multi-electrode valves) equal to that of many receivers employing 8 valves or more. Brief specification includes: Large "Airplane" dial, with different coloured lights automatically switched on for each wave-range. Micro-vernier 2-speed drive. 4-point wave-change and gramophone switch. Volume control and variable tone control also operative on gramophone. Reinforced heavy-gauge steel chassis. Covers 19–2,000 metres.
Circuit comprises Preselector circuit, radio frequency amplifier (operative on all 3 wavebands), triode-hexode frequency changer, double band-pass I.F.T. coupled I.F. amplifier, double diode-triode detector and L.F. amplifier. D.A.V.C. applied to 3 preceding valves. 3-watt pentode output.

9 VALVE FOUR-WAVE SUPERHET DE LUXE

14 GNS.

(Complete with 9 B.V.A. Valves)

4 wavebands: 12.8-33, 29-80, 190-550, 800-2,000 metres. Illuminated dial with principal station names.

Controls.—A feature of the receiver is the number of independent controls fitted, making it extremely interesting to operate. These include sensitivity control (varying bias on R/F stage), or Q.A.V.C. with manual muting control for inter-station noise suppression. 5 position wave-change and gramophone switch. Progressive variable tone control operative on radio and gram.

Circuit in Brief.—Aerial input to pre-selector circuit, radio frequency amplifier, latest type triode-hexode frequency changer, 2 band-pass I.F.T. coupled I.F. amplifiers, double diode detector, triode L.F. amplifier, separate triode phase-changer capacity coupled to 2 large pentodes in push-pull. Heavy 16-gauge steel chassis. Finest components and workmanship throughout. Harries tetrodes in place of output pentodes if desired.

STANDARD MODEL 12 GNS. As above, but with triode push-pull output, and fewer controls fitted

DEFERRED TERMS on application or through our City Agents
LONDON RADIO SUPPLIES LTD.
11, OAT LANE E.C.2
Demonstrations Daily.

All McCarthy receivers supplied complete with valves, knobs, pilot lamp, leads, mains cable and plug. 12 months' guarantee. Valves 3 months.)

Complete illustrated catalogue, with technical data and circuit diagrams, on receipt of 3d. in stamps, or abridged list of McCarthy chassis types free of charge.

McCARTHY RADIO LTD.
44a, Westbourne Grove, London, W.2
Telephone: Bayswater 3201/2

Letters to the Editor

The Editor does not hold himself responsible for the opinions of his correspondents

Television To-day

HOW can we reconcile the great public interest in free demonstrations of television—as at South Kensington and Radiolympia in recent months—with the almost negligible sale of television receivers? The answer seems to be a clear enough case of cause and effect—for one good look at the sort of entertainment television provides is quite enough to convince even well-to-do people that the expense of the apparatus for the home is not worth while. Need we delve into the depths of psychology to discover this very obvious reason for the public's sales resistance to the television millenium? The trouble with television is surely not its present imperfection—as Mr. L. Marsland Gander recently suggested in your columns—but in its almost perfect ability to demonstrate what an incredibly poor entertainment it normally provides. Whether an extra Treasury grant can make any appreciable difference to this state of affairs remains—quite literally—to be seen.

Sevenoaks. ALAN HUNTER.

Morse Interference

IT is with much interest that I note Mr. C. B. Fagan's letter concerning interference on the higher part of the medium-wave band. I, too, find listening on wavelengths above approximately 420 metres quite unbearable due to overpowering interference, apparently caused—as Mr. Fagan states—by some antique spark transmitters. By the use of direction-finding apparatus, I have traced this particular noise to the East and South-East coasts.

It may be of interest to note that I am situated in the South-East of London, and yet am close enough to pick up this disturbance. E. S. LEFEAUX.

Quality

FURTHER to the remarks of J. A. Hartley in the issue of December 30th.

Until two years ago I lived in the Manchester area, about twenty miles from the transmitter, and I carried out a number of experiments with both transformer and RC coupled push-pull amplifiers.

I was at the time inclined to agree with your correspondent, but having moved to London I was immediately struck with the improvement in the quality of transmissions, and on comparison between the two types of amplifier found RC coupling superior.

I firmly believe that as most transmissions from North Regional are relays from the London or other stations the loss of quality is due to losses in the transmission lines; again, the studio facilities in the provinces are not as good as at Portland Place, consequently most transmissions are a compromise.

Whilst on the subject of quality amplifiers, may I register a plea for some system of analysing the sensitivity of loud speakers, —or should I say reproducers?—as it is no use having an amplifier, with say four watts undistorted output, when with some speakers you get the same audible output with two watts and others you need the full four?

London, S.E.11. M. MISTOVSKI.

Rubber Surrounds for MC Speakers

I AM surprised that no mention has been made of late years of the use of rubber sheet for the cone surround of MC speakers. An article by Dr. McLachlan was published on this subject in *The Wireless World* about eight or nine years ago, and I have myself had rubber surrounds in use for about seven years.

From my own experience (but in the absence of actual measurements) I am certain that transient response is very much better when rubber surrounds are employed (provided that attention is paid to other details), and the absence of a major resonance in the bass removes yet another obstacle to good reproduction.

The rubber sheet (0.02in. thick and about 1.5in. radial width) forms the sole mechanical restraining force on the cone, centring of the coil being obtained by means of a thin felt washer, on the hairs of which the coil rides. (This method of centring was described in *The Wireless World* about 1929). The cone is so free from restraint that a puff of air from one's mouth will cause a displacement of about 0.25in. The natural period of vibration of the system is about 5 c/s.

I expect there has been some prejudice against the use of rubber on account of its supposedly short life, but my last but one surround lasted from May, 1933, to Oct., 1937, when it showed signs of cracks. A much longer life than this is to be expected from a properly compounded modern rubber sheet or from one of the synthetic rubber-like materials such as Neoprene.

For the information of anyone wishing to try a rubber surround, I should add that the weight of the moving parts should be kept as low as possible (in my case, the 1in. dia. 15 ohm coil weighed 2.43 grams and the 7in. cone 2.7 grams, the latter being formed from a thin sheet of good quality blotting paper slightly impregnated with an oil modified bakelite resin varnish.

Welling, Kent. W. PUFFETT.

MAGAZINE SOLDERING IRON

Interest was recently aroused by our published description of an American soldering iron with an arrangement for feeding the solder to the bit by a trigger-operated mechanism. Here is an iron of similar type introduced by Runbaken Electrical Products of Manchester. A reel of solder is mounted under the handle

Television Screens

IN an attempt to explain the disappointing sales of television receivers to the general public since the Radio Show of last August the Press, almost as a whole, attribute it to the small size screen, which they maintain is too small for the home.

Now as the term "small" is obviously only a relative term, then it follows that the expression is used only in a relative sense, and the question arises—small relative to what?

It cannot be relative to simply a larger television screen itself because the screen was called small before anyone had heard of the larger screens which occasionally make a brief and "sensational" headline in the Press.

The answer is, undoubtedly, the cinema screen.

Either consciously or sub-consciously the man-in-the-street compares the television screen to the huge cinema screen which he has seen so many times, and which has become his standard or size in visual entertainment.

If any reader has entered a cinema soon after a television demonstration he will readily agree with my contention.

The public should be shown that a screen giving a picture ten inches by eight in size is quite large enough for the average sitting-room, and after a few moments one forgets that one is viewing a television screen and becomes absorbed in the programme, as one does in the cinema. S. GOULD.

Dagenham, Essex.

Resistance v. Transformer Coupling

I SEE this hoary old argument is starting again. Probably there will be a long and acrimonious correspondence, full of opinions and empty of evidence. People with axes to grind (I'm one myself) will bring forward the verdicts of totally unbiased juries, and others will quote equally unbiased verdicts to prove the opposite.

And in the long run we shall be just as wise as we are now.

So here is a *practical* suggestion. During the last few years *The Wireless World* has produced many "phase-changing" push-pull amplifiers with pure RC. Let us now have detailed instructions for the conversion of one of these to *really first-class* transformer coupling—it would cost very little—and then readers could judge for themselves instead of depending on other peoples' "say so."

Isleworth. P. K. TURNER.

THERE is one point which always appears to be overlooked whenever the relative merits of transformers and RC coupling are being discussed, and that is the extensive use of transformers at the transmitting end. There are probably never fewer than half a dozen transformers linking the amplifiers between the microphone and transmitter, and in many cases choke modulation is em-

ployed. If, therefore, the distortion due to these iron cores is of such negligible proportions as to be inaudible, even to RC enthusiasts, it may well be asked why one in the receiver should have such alleged adverse effects on the quality of reproduction. It seems probable that the distortion introduced by transformers is more theoretical than real—in a well-designed instrument. A. CHESTERMAN.

Christchurch, Hants.

[If a transformer does introduce more distortion than an RC coupling, the fact that several transformers are used in the transmitter does not necessarily mean that their use in the receiver does not increase distortion. Assuming that transformers do cause distortion, then to use one in a receiver is to increase the total distortion in spite of their being used also in the transmitter. The difference between transformer and RC coupling would not be so audible, however, as if no transformers were used in the transmitter. Their use in the transmitter thus makes their use in the receiver more permissible.

In connection with transformer versus RC coupling it is interesting to refer to page 97 of *The Wireless World* for July 30th, 1930, where the designers of the Science Museum Receiver state that of various amplifiers having identical steady state characteristics, the paraphase amplifier is unquestionably the best.—ED.]

Atmospheric Cross-Modulation

WHILE thanking Mr. Dudley E. Foster for his interesting letter in response to my article, I would point out that it was definitely stated that the "signal attenuation" figures in Table A were monthly average values. Also, that these were derived from daily measurements of the 2,903 kc. carrier. There was no fixed relationship between the variations of the beat and either or both of the fundamental transmissions.

When the loop aerial was in use, bearings showed a fair amount of "swing," sometimes up to about 45 deg. "Bearing swing" was also noticed on normal transmissions between 2,000 and 3,000 kc/s. Average bearings appeared to indicate Brookmans Park as the source of interaction.

I do not think that the beat variations can be attributed to interference between the ground wave and the sky wave. It was explained in *The Wireless Engineer* article of June, 1936, that severe variations were observed within the near vicinity of Brookmans Park. WILLIAM L. HAFEKOST.

Brentwood, Essex.

MODERN PICK-UP DESIGN

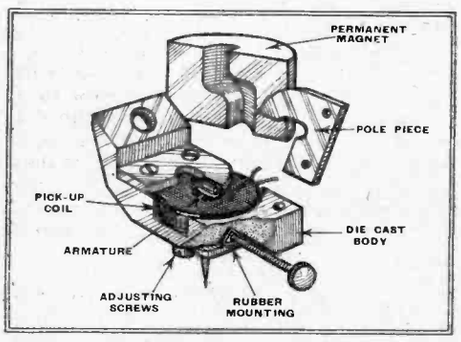

An aluminium-alloy permanent magnet of unusual shape has been adopted in the Cosmocord Model 25 pick-up. By this means a short armature of low inertia, and consequently good transient response, can be used without detriment to the output voltage level.

NEWS FROM THE CLUBS

Bradford Short-wave Club

Headquarters: Bradford Moor Council Schools, Leeds Road, Bradford.
Meetings: Fridays at 7.30 p.m.
Hon. Sec.: Mr. S. Fischer, 10, Highfield Avenue, Idle, Bradford, Yorks.

On January 21st a lecture and demonstration will be given by a representation of Belling and Lee on the subject of "The Elimination of Interference."

Slade Radio

Headquarters: All-Saints Parochial Hall, Broomfield Road, Slade Road, Erdington, Birmingham.
Meetings: Alternate Thursdays at 8 p.m.
Hon. Sec.: Mr. G. C. Simmonds, 38, Rabone Lane, Smethwick.

This Society recently celebrated its tenth birthday with a supper at which Dr. C. H. Harcourt, the founder and president, presented trophies and certificates for success in the year's DF contests. The lecture given on a subsequent date by Mr. H. G. Evans on the subject of SW working was much appreciated. The year concluded with a debate at which members discussed the question: "Is television developing on the right lines?"

This evening (Thursday) Mr. N. B. Simmonds will talk on the construction and use of wavemeters and oscillators. The public are particularly invited to attend the lecture by Mr. Quarrington, of Cossor's, in which he will deal with cathode-ray tubes and their application. The meeting will be on February 8th at a venue in the City to be announced later. Those desirous of attending are asked to let the secretary know so that adequate accommodation can be arranged.

Croydon Radio Society

Headquarters: St. Peter's Hall, Ledbury Road, South Croydon.
Meetings: Tuesdays at 8 p.m.
Hon. Pub. Sec.: Mr. E. L. Cumbers, 14, Campden Road, South Croydon.

A special demonstration of high-fidelity will be given on January 18th by Mr. V. Williams. He will use his Voigt loud speaker and Sound Sales receiver. Mr. Williams has named his house "Hiphidel" in honour of his equipment.

Automatic Frequency Control Systems.—By John F. Rider. Pp. 142+x. Published by John F. Rider, 1440, Broadway, New York City.

THIS book opens with an explanation of what automatic frequency control is and why it is needed. It then goes on to show the basic principles of a discriminator in a very simple and clear manner. In Chapter III actual discriminator circuits and their mode of operation are comprehensively discussed, and examples of types employed in commercial receivers are given. The oscillator control circuit, which is the link between the discriminator and the oscillator circuit, is discussed, and the various types of control are treated.

The remainder of the book is devoted to a description of the AFC systems used in American commercial sets, and to a very complete discussion of the methods of adjusting such systems and of locating defects which may develop in them.

The whole question of the method of operation and adjustments of AFC circuits is well covered, but their design is not touched upon. The book is well printed and bound, and can be confidently recommended to all interested in this development. It is obtainable in this country from Holiday and Hemmerdinger, 74-78, Hardman Street, Deansgate, Manchester, 3, and is priced at 5s. W. T. C.

SUPERSEDING the old "S.O.S." of the days of the 'spark' "Mayday-Mayday" now brings every near-by vessel or aircraft to the aid of the pilot in trouble. Without utter dependability of each component in radio transmitter and receivers, that call might never be heard—might never be sent. So to make sure they fit T.C.C. condensers in the knowledge that every T.C.C. is the product of a concern with over 30 years specialised experience in condenser manufacture and design. And that makes for real DEPENDABILITY.

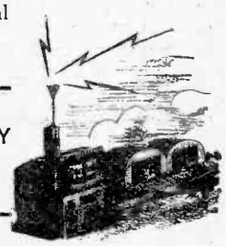

IT'S T.C.C.
WHEN DEPENDABILITY
IS THE
VITAL FACTOR

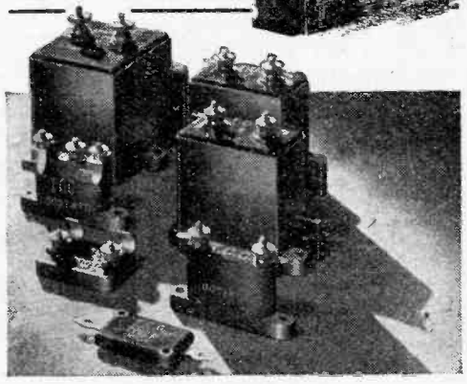

T.C.C.
ALL-BRITISH
CONDENSERS

THE TELEGRAPH CONDENSER CO., LTD.,
WALES FARM ROAD, N. ACTON, W.3.

CA 3799

Recent Inventions

Brief descriptions of the more interesting radio devices and improvements issued as patents will be included in this section.

TIME-BASE CIRCUITS.

THE circuit shown produces saw-toothed oscillations for scanning in which the usual curvature, due to self-inductance or capacity, is compensated so as to give a straight-line traverse with a rapid "flyback" stroke.

The coil L which provides the magnetic deflecting field for the cathode-ray tube (not shown) is arranged in series with an auxiliary coil L1, and a smaller coil L2, the

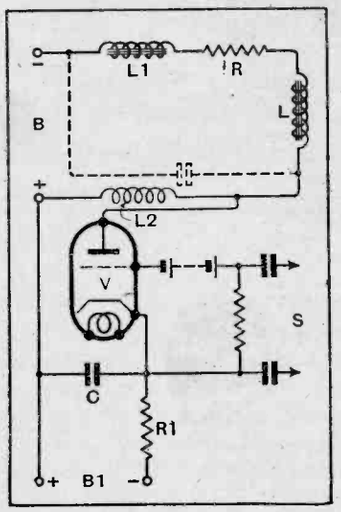

Time-base circuit giving a linear scanning stroke with rapid fly-back.

resistance R merely representing the inherent resistance of the coils. A source B of EMF tends to drive a current through this circuit in one direction.

The main timing condenser C is charged up through a resistance R1 from a source B1 of higher voltage than B, and is periodically discharged through the valve V when the latter is "triggered" by synchronising impulses applied at S.

The inductive "kick" from the small coil L2 serves to prolong the conductivity of the valve V, for a short period, and this tends to straighten the upward curve of the saw-tooth voltage. The coil L1, which does not control the electron stream, serves to increase the over-all inductance of the circuit relatively to its inherent resistance.

Cie pour la Fabrication des Compteurs et Materiel d'Usines à Gaz. Convention date (France) August 21st, 1935. No. 472293.

o o o o

AUTOMATIC TUNING CONTROL

IN order to correct automatically for frequency "drift" which may occur, say in the local oscillator valve of a superhet set, a current from one of the intermediate-frequency stages is diverted into a frequency-changing valve, which is coupled to two "corrector" circuits, one tuned a little above and the other a little below the IF frequency. Any change in frequency, such as may be produced by variations in temperature or in the supply of voltages, will then produce a direct current through rectifiers connected differentially to the "corrector" circuits.

This is applied to stabilise the frequency, either through a voltage-operated electron-discharge device, acting as a variable capacity, or by altering the effective inductance of one of the tuning elements in the local-oscillator circuit.

Marconi's Wireless Telegraph Co., Ltd. Convention date (U.S.A.), February 4th, 1935. No. 471738.

o o o o

TELEVISION RECEIVERS.

THE picture is first reproduced by the electron stream from a cathode-ray tube upon a fluorescent screen F, which is made of material producing a pronounced "afterglow." At the back of the screen is a sheet S of transparent material, which is coloured so as to pass only the lower-frequency components of the fluorescent light. On the other side of the sheet is a very thin conducting layer F1 of photo-electric material particularly sensitive to low-frequency light, and at the far end of the tube is a second fluorescent screen F2 which produces a white or bluish-white light.

The electrons liberated from the photo-electric layer F1 are focused upon the screen F2 by the field from an external winding L. The arrangement is stated to reduce

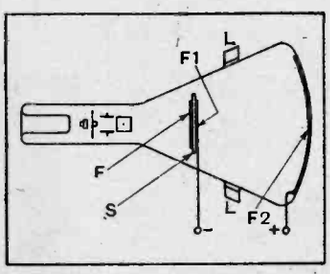

CR tube designed to give an image of high brilliance.

the "Flicker" effect due to short-lived fluorescent light, and also to give a final picture of higher brilliance than usual.

Baird Television, Ltd.; C. Szegho; and D. M. Johnstone. Application date March 5th, 1936. No. 471539.

o o o o

LIGHT "AMPLIFIERS"

AN image of the picture to be televised is focused on to a photo-electric cathode, and the electrons liberated are projected on to a fluorescent screen so that they produce a visible image. The fluorescent light from this image is then reflected back on to the cathode so as to register exactly with the original image. This helps to increase the original emission of electrons, and, in effect, serves to amplify the amount of light available by a kind of back-coupling effect between the fluorescent screen and the photo-sensitive cathode.

The electrons are focused on to the fluorescent screen by electric or magnetic fields of force, whilst the fluorescent light is reflected back on to the cathode by suitable mirrors, the two reflecting systems being so arranged that they do not interfere with each other.

Telefunken Ges fur Drahtlose Telegraphie m.b.h. Convention date (Germany), March 1st, 1935. No. 471365.

o o o o

TELEVISION TRANSMITTERS.

THE picture to be televised is focused through a lens L on to a photo-sensitive screen S, which

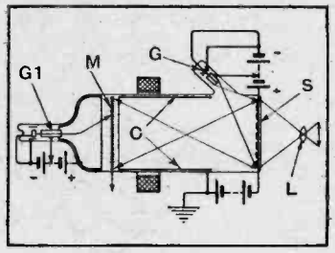

CR tube designed for use in television transmitters.

has the property of producing "abnormal" secondary emission. The screen is made of a layer of aluminium, so thin as to be transparent, on which a mono-molecular coating of the oxide of the same metal is deposited. The photo-sensitive surface is subjected to a uniform bombardment of electrons from a gun G, and in these circumstances the secondary emission of electrons varies "abnormally" from point to point in accordance with the intensity of the light projected on to it from the lens L.

The augmented stream of electrons is first focused by a metal cylinder C on to a double-faced mosaic-cell electrode M, so as to form an "electric image" of the original picture. The opposite face of the cell-electrode is then scanned by the electron stream from the main gun G1 of the tube, and the resulting discharges are used to modulate the outgoing carrier wave.

H. G. Lubszynski. Application date January 15th, 1936. No. 472162.

o o o o

ELECTRON MULTIPLIERS.

LIGHT from a source O is focused upon one of a pair of photo-sensitive electrodes P, P1, which are connected across an external circuit L, L1. The latter is supplied with an A.C. voltage from a generator (not shown). A second pair of electrodes P2, P3 are arranged at right-angles to the first, and are biased to produce a steady electric field at right angles to the alternating field across the electrodes P, P1.

In these circumstances the electrons liberated by the ray of light are swept from side to side of the

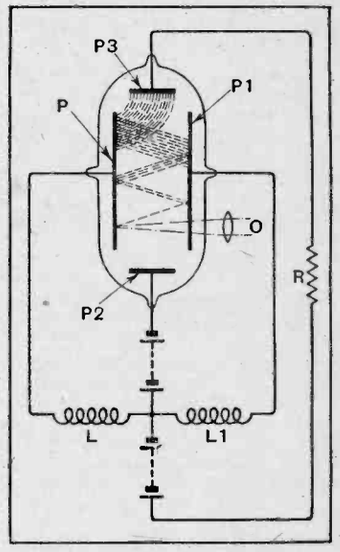

Circuit and details of electron multiplier described in Patent No. 471672

electrodes P, P1, as shown in dotted lines, and produce fresh electrons by secondary emission at each impact. The amplified stream finally reaches the output anode or collector P3, and produces voltage variations across a resistance R. The amplitude and frequency of the voltages applied to the electrodes P, P1 from the oscillatory circuit L, L1 are so chosen that the time taken for the stream to pass from one side to the other corresponds to one half-cycle.

Marconi's Wireless Telegraph Co., Ltd., and G. B. Banks. Application date February 8th, 1936. No. 471672.

ELECTRONS produced by the impact of light on a photo-electric cathode are caused to pass in succession through a series of mesh work electrodes. These are arranged across the path of the stream, and are biased with a constantly increasing voltage. Since the electrons pass through the apertures of the mesh work, a large proportion of them strike the wires at a glancing angle, and this is stated to favour the liberation of secondary emission.

When the device is used as a light cell, a load resistance of the order of 500 ohms can be used instead of the usual 5,000 ohms.

G. Weiss. Convention dates (Germany), January 8th; February 1st; and May 24th, 1935. No. 471800.

The British abstracts published here are prepared with the permission of the controller of H.M. Stationery Office, from specifications obtainable at the Patent Office, 25, Southampton Buildings, London, W.C.2, price 1/- each. A selection of patents issued in U.S.A. is also included.

The Wireless World

THE PRACTICAL RADIO JOURNAL

27th Year of Publication

No. 960. THURSDAY, JANUARY 20TH, 1938. VOL. XLII. No. 3.

Proprietors : ILIFFE & SONS LTD.

Editor :
HUGH S. POCOCK.

Editorial,
Advertising and Publishing Offices :
DORSET HOUSE, STAMFORD STREET,
LONDON, S.E.1.

Telephone: Waterloo 3333 (50 lines).
Telegrams: "Ethaworld, Sedist, London."

COVENTRY : Hertford Street.
Telegrams: "Autocar, Coventry." Telephone: 5210 Coventry.

BIRMINGHAM :
Guildhall Buildings, Navigation Street, 2.
Telegrams: "Autopress, Birmingham." Telephone: 2971 Midland (4 lines).

MANCHESTER : 260, Deansgate, 3.
Telegrams: "Iliffe, Manchester." Telephone: Blackfriars 4412 (4 lines).

GLASGOW : 26B, Renfield Street, C.2.
Telegrams: "Iliffe, Glasgow." Telephone: Central 4857.

PUBLISHED WEEKLY. ENTERED AS SECOND CLASS MATTER AT NEW YORK, N.Y.

Subscription Rates :
Home, £1 1s. 8d. ; Canada, £1 1s. 8d. ; other countries, £1 3s. 10d. per annum.

As many of the circuits and apparatus described in these pages are covered by patents, readers are advised, before making use of them, to satisfy themselves that they would not be infringing patents.

CONTENTS

	Page
Editorial Comment	47
How a Receiver is Designed—III AC/DC Local Receiver	48
DF in the Air	53
Lissen "Monarch" Radiogramophone Reviewed	56
Unbiased	58
Improving Receiver Performance	59
The Future of Big Screen Television	60
News of the Week	62
Readers' Problems	65
Random Radiations	66
Letters to the Editor	68
New Apparatus Reviewed	69
Recent Inventions	70

EDITORIAL COMMENT

Interference Standards

Permissible Limits Defined

RIGHTLY or wrongly, it was decided some years ago that before any definite steps could be taken to abate the man-made interference nuisance, methods of assessing and measuring the disturbing impulses had to be devised and agreed by the various interests concerned; further, an upper limit of tolerable or permissible intensity had to be laid down.

Interference is inherently of a random, intermittent and somewhat intangible nature, and we are hardly surprised that the working out of a scheme for putting it on an exact quantitative basis has taken a long time, although we were scarcely prepared for a delay of over four years. It was for this reason that *The Wireless World* long ago advocated the formulation, if only as a stop-gap, of simple regulations framed in the spirit of reasonableness. During the years that have been spent in attempting to reach an agreement, electrification of the country has proceeded intensively, and each day that is wasted adds to our difficulties.

Electrical "National Mark"

At last, a British Standard Specification* defining permissible limits of interference has been issued with the implied blessing of such important bodies as the Post Office, the Institution of Electrical Engineers, the National Physical Laboratory, the B.B.C., and the R.M.A. Feelings of gratification at the publication of this document will be somewhat tempered by the fact that the "interference-free" standards laid down for electrical appliances do not seem to be of a very exacting order; this opinion is borne out by the introductory statement that "The specification of limits sufficiently low to ensure freedom from interference in all cases is at present considered to be impracticable, having due regard to the economic and manufacturing considerations involved. The full realisation of the freedom from interference implied in the present specification requires that in all cases every possible protective measure shall be adopted in respect of the receiving equipment: e.g., the adequate screening of the receiver, the location of the receiver and aerial in the best available positions, the use of suitably designed aerials and earth connections and the insertion of a mains filter or interference suppressor in the receiver." The possible need for external suppressors in the mains leads is also envisaged.

In Terms of Microvolts

The actual quantitative limits of magnitude of interference are laid down as 500 microvolts maximum at the terminals of the machine or appliance, or in cases where it is necessary to measure the field strength of an interfering field, a maximum of 100 microvolts per metre. These interference strengths relate only to wavelengths between 200 and 1,500 metres, and the specification does not apparently apply to such notorious producers of interference as electro-medical appliances, trolley buses or electrical signs; these are to be treated later.

It is perhaps understandable that the specification does not deal with interference as it affects short waves, but, in view of the fact that television reception is one of the "rights" of the British licence-holder, it is surprising that interference peculiar to the ultra-short bands is not mentioned. Perhaps, however, this matter will have attention when the promised specification relating to motor ignition systems is published.

The realisation of an idyllic state of affairs where range of reception is limited only by inherent receiver noise and the uncontrollable manifestations of Nature seems to be nearly as remote as ever, and we can only hope that any anti-interference legislation that may be framed will be on a basis promising rather more relief to wireless users.

* B.S.S. No. 800 : The British Standards Institution, 28, Victoria Street, London, S.W.1. Price 2s.

How a Receiver

AC/DC LOCAL STATION SET

Full Description and Operating Notes

THE details of the design of a two-valve receiver have been discussed in the previous articles of this series, and it now remains to deal with the receiver as a whole and its construction. The complete circuit diagram is shown in Fig. 11, and it will be seen that this consists of the combination of the various circuits discussed earlier, save for three points of detail which will be dealt with later. The receiver was designed, and the values chosen, in accordance with the details given in the preceding articles, and in the practical tests only minor modifications proved necessary.

Hitherto the actual design of the coils employed has not been treated, because in a simple receiver of this nature it is usually easier to do this experimentally than theoretically. There are three coils for each waveband, and, taking the medium waves first with the switch S1 closed, the tuned circuit comprises L2 and C1. For a given tuning condenser and normal stray capacities the ratio of the maximum and minimum frequencies to which the circuit will tune is fixed, and the actual frequencies depend only on the coil inductance. For the medium waveband the minimum range required is 200-550 metres, and this at once settles the inductance required.

The Tuning Coils

The physical dimensions of the coil are determined by two considerations: the first is efficiency and the second the ease of coupling with other coils. Efficiency is important, but not to such an extent as one might think, because the circuit is actually damped quite heavily by the input impedance of the detector. The effects of this input impedance must, in any case, be removed by means of reaction, and reaction will also compensate to a large extent for deficiencies in the coil itself. It is, therefore, possible to obtain quite good results with a bad coil. We, naturally, shall not use such a coil, but it is clear that it is not worth while going to much trouble to produce an exceptionally good coil if the difference between it and a poor one is quite small.

It is, therefore, better to fix the dimensions of the coil more with regard to the coupling to the other coils than with respect to efficiency. In most present-day receivers the avoidance of coupling between coils is a matter of primary importance, since unwanted couplings between different circuits will lead to instability. To this end coils are screened and they are usually made of small dimensions, partly because a small screen is needed for such coils, but also because small coils have a much lower stray field than large ones.

In this case we have only a single tuned circuit, so that we are not concerned with stray couplings to other circuits, and the coils need not be screened, neither need they be small.

In the matter of couplings, we are concerned primarily with obtaining the correct very tight coupling between L2 and L3 and the correct loose coupling between L1 and L2, with as little coupling as possible directly between L1 and L3. These considerations are best met by a single layer coil for L2 of fairly large diameter, and such a coil is also one of quite high

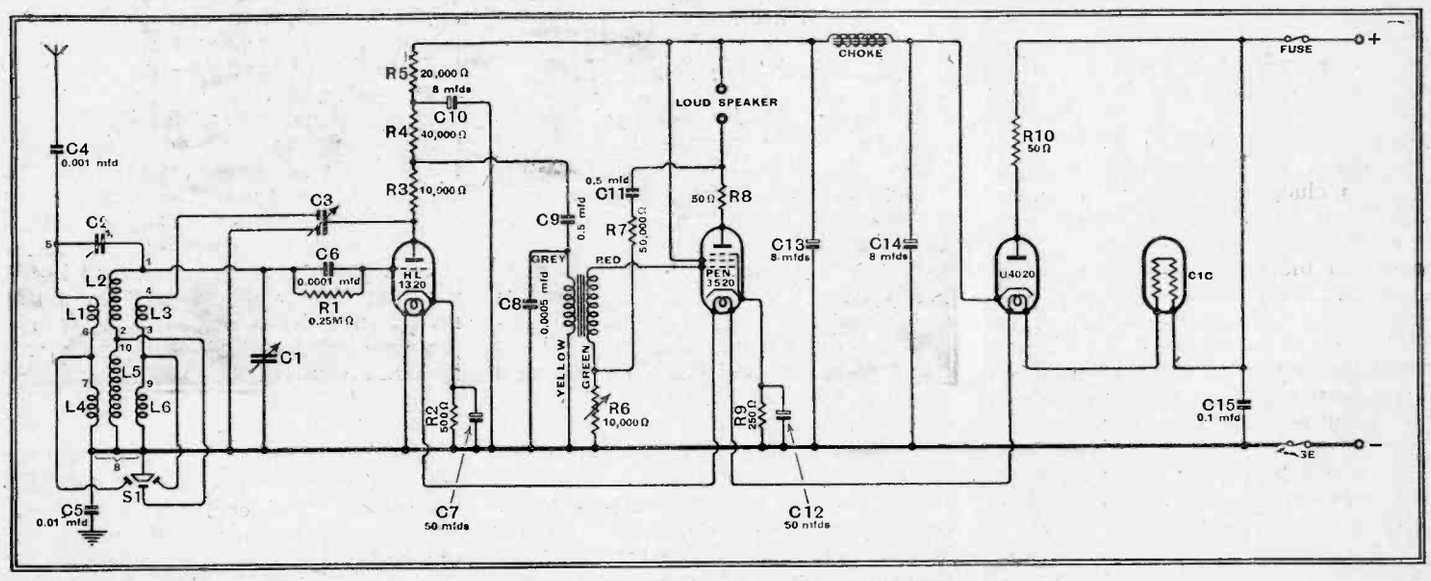

Fig. 11. The complete circuit diagram is shown here. The resistance R2 is included to obtain a small negative bias so that smooth reaction is secured.

s Designed.—III.

IN the previous articles in this series the theoretical considerations underlying the design have been thoroughly discussed. In this article certain modifications found necessary in practice are dealt with in addition to the construction and operation.

efficiency. L3 can then consist of a few turns wound at the earthy end of L2 and very close to it.

The usual practice for L1 is to provide a winding over the earthy end of L2, but this applies only when L1 is of low inductance. As has already been pointed out, L1 in this receiver is of high inductance, and the coupling would be much too tight if it were overwound on L2. Experience shows that the most convenient arrangement is to use a bunch winding for L1, and this coil can be wound on a separate former and mounted at the high potential end of L2. This is also convenient, since it is readily possible to adjust the coupling experimentally by varying the distance between the two coils.

The optimum conditions for these coils were determined experimentally, and full winding details, together with the dimensions of the formers, are given in Fig. 12.

In the case of the long-wave coils L4, L5 and L6, a single-layer winding is hardly feasible, and here a method of slot winding, similar to that adopted for L1, is used. Again, the complete details are given in Fig. 12.

Reaction

At this point it may be as well to remark that on the long waveband the primary L4 is not of particularly high inductance. The reason for this is that a high inductance here has not been found particularly satisfactory. It was tried out in the experimental model, and it was found that interference from telegraph stations working on wavelengths of over 3,000 metres was experienced. This was due to the aerial circuit resonating in this region, with the result that quite a large interference voltage was set up across the coil, and a portion of this transferred to the secondary, in spite of the secondary being tuned to quite a different frequency.

The use of a large primary is quite possible without such interference when a receiver includes more than a single tuned circuit, but in this case it has been necessary to use a relatively smaller primary on the long waveband than on the medium. One result of this is that the balancing action provided by C2 is not so effective on the long waveband, but fortunately this is counterbalanced by the inherently greater selectivity of the tuned circuit on long waves.

Turning now to the receiver itself, one difference will be noticed in the detector circuit between the diagram Fig. 11 and that of Fig. 10. This is the insertion in the cathode lead of the detector of the resistance R2 shunted by the condenser C7. The purpose of this resistance is to give a small negative bias to the valve. This is unusual in a grid detector, but has a very considerable effect upon the smoothness of reaction and hence upon the performance of the set as a whole. For on all but the local stations this depends on reaction to quite a large degree. When the grid leak is returned directly to cathode, that is, directly as far as direct current is concerned, it is often found that as reaction is advanced the valve goes into oscillation with a distinct "plop." Moreover, overlap is present, so that the reaction condenser must be reduced considerably beyond the point at which the valve started to oscillate before it ceases oscillating.

Both these troubles prevent one from working close to the oscillation point and hence from obtaining the maximum sensitivity and selectivity. One method which is often adopted for obtaining smooth reaction is to reduce the anode voltage. This is quite effective, but it has the disadvantage of reducing the undistorted output obtainable from the valve on a strong signal. While it may lead to suitable conditions for distant reception, the use of a low anode voltage renders the receiver unsuitable for local reception.

As far as reaction is concerned, a similar effect can be secured by giving the valve a small negative grid bias, and the valve is then still capable of providing the necessary output for local reception. This course has been adopted in this receiver, therefore, and the value of R2 was found experimentally as being about the minimum value needed for smooth reaction. It is shunted by a 50-mfd. condenser, C7, so that the cathode is effectively at earth potential for alternating currents. This is necessary, in order to avoid mains hum.

Avoiding Mains Hum

The next point of difference between Figs. 10 and 11 lies in the inclusion of R10 in series with the anode lead of the rectifier. This resistance is advised by the valve makers, in order to protect the valve from a flash-over during a switching surge. A value of 50 ohms is adequate.

The third and last alteration lies in the inclusion of C15 directly across the mains. This condenser was found experimentally to be necessary for the avoidance of modulation hum. This form of hum is absent when the receiver is not tuned to a signal, but makes its appearance whenever a carrier is tuned in, and it is usually more apparent with a strong signal than with a weak. It is usually due to RF currents in the supply mains which become modulated by AC in the rectifier and are then picked up by the detector. The simple expedient of connecting a small condenser across the mains effectually prevents this trouble.

It may be remarked that no provision has been made for connecting a gramo-

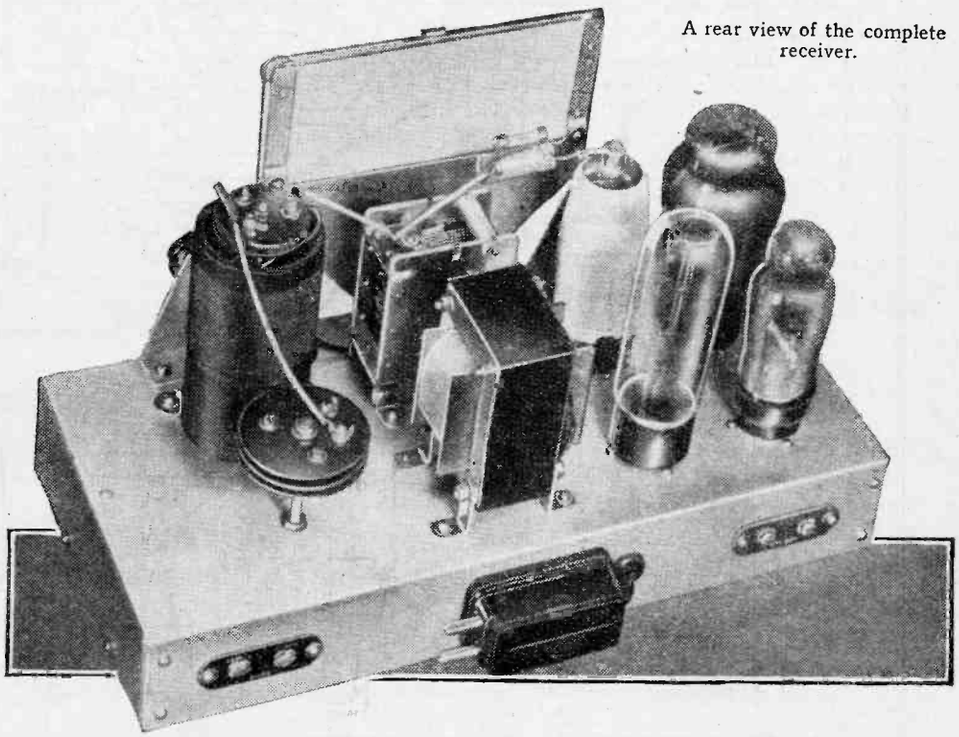

A rear view of the complete receiver.

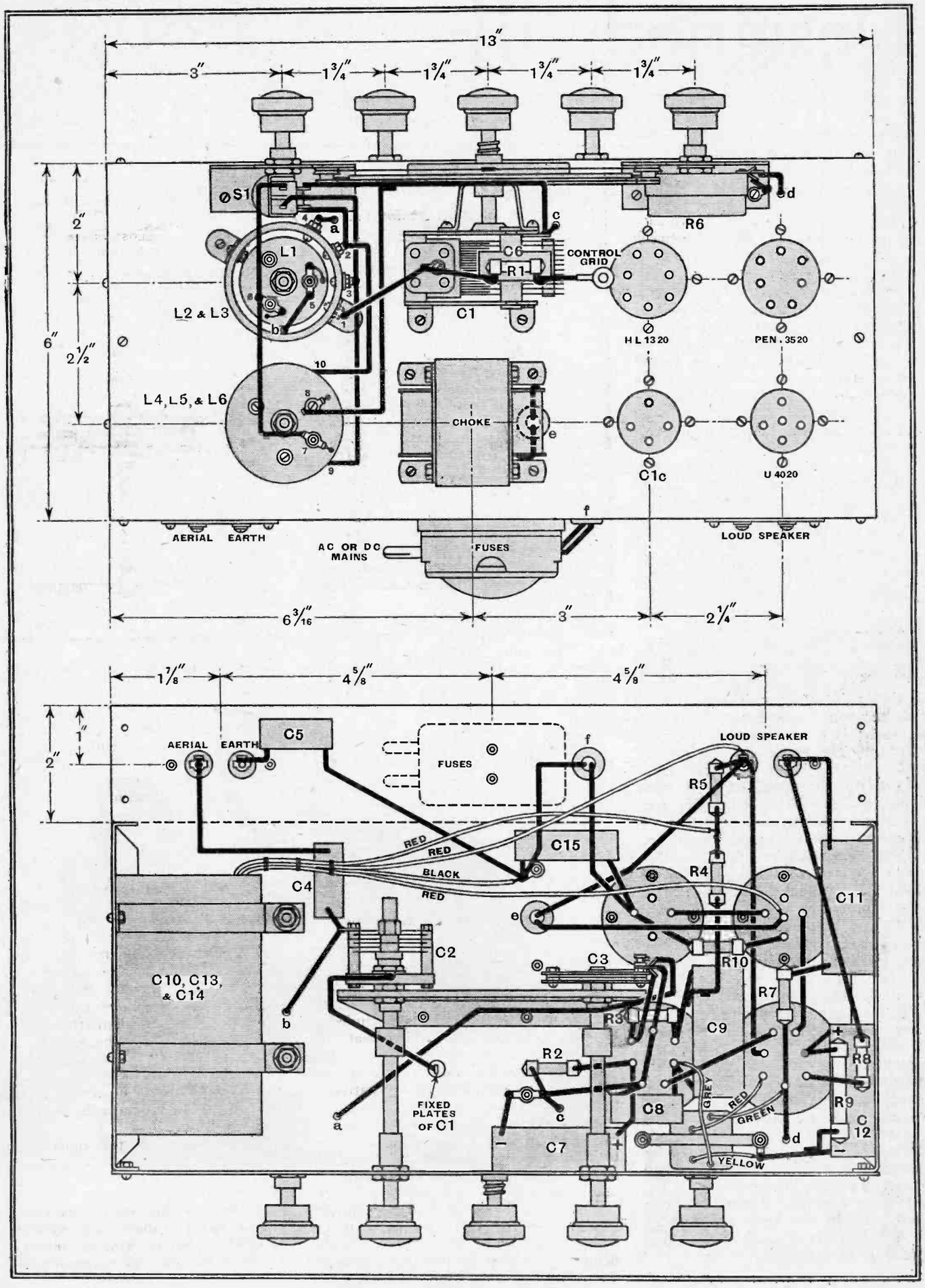

Full constructional details of the set are given in these drawings.

How a Receiver is Designed—III.—

phone pick-up; this could be connected in the grid circuit of the detector, but it would considerably complicate the wiring, for rather elaborate screening would be needed to avoid hum pick-up.

As will be seen from the drawings, the present layout lends itself admirably to short leads in the detector grid circuit, for the coil L2 is connected directly to a tag on the top of the tuning condenser C1 and thence through C6 and R1 to the grid of the detector, which is the top cap of the valve. R1 and C6 are actually supported by the wiring, and the lead between them and the grid clip of the detector is only about ½in. in length.

From the point of view of hum the grid of this valve is the most critical part of the set, and it is easy to see that if a radio-gramophone switch were fitted quite long leads would be needed, and these would require careful screening for the avoidance of hum pick-up. Furthermore, this screening would inevitably increase the stray capacity across the tuned circuit and would so affect the tuning range.

Turning now to the construction, this is quite straightforward, and most points will be clear from the drawings which accompany this article. It may be remarked, however, that the tuning condenser is not supplied with a soldering tag fitted on the top. There is, however, in the centre of the insulating material which supports the vanes, a tapped hole 6BA, by means of which a soldering tag can be fixed on with a short 6BA round-headed screw, and this contacts with the support of the fixed vanes. This tag is fitted and used for the connection to L2, as well as the grid leak and condenser. The underneath tag is used for the connection to C2, since this is more convenient in the wiring.

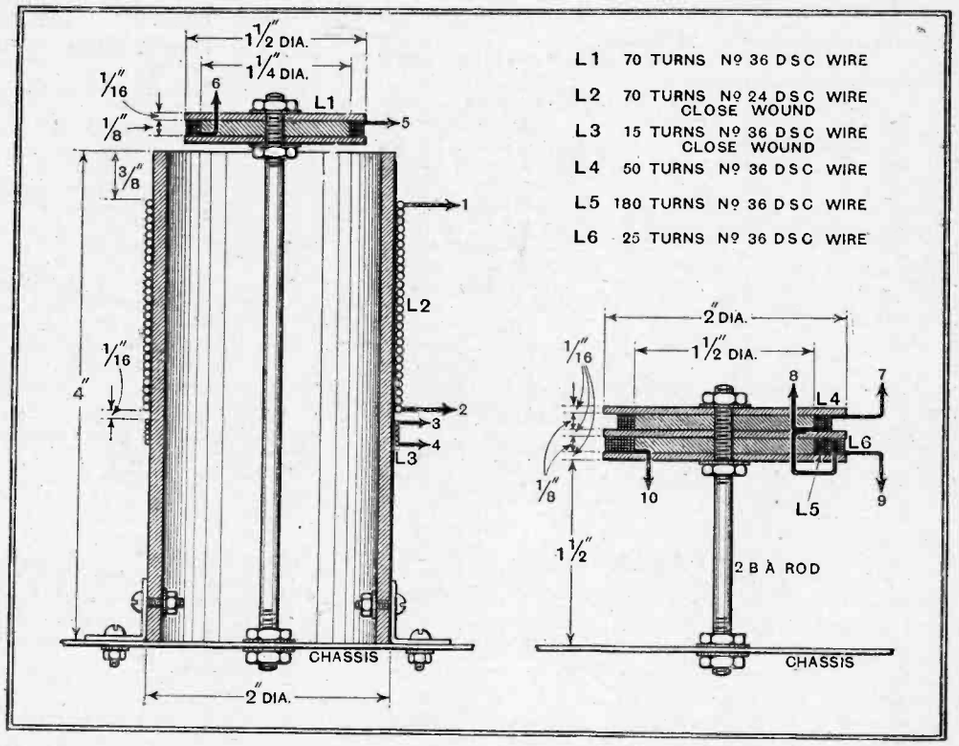

Fig. 12. The necessary details for constructing the coils are clearly indicated in this diagram.

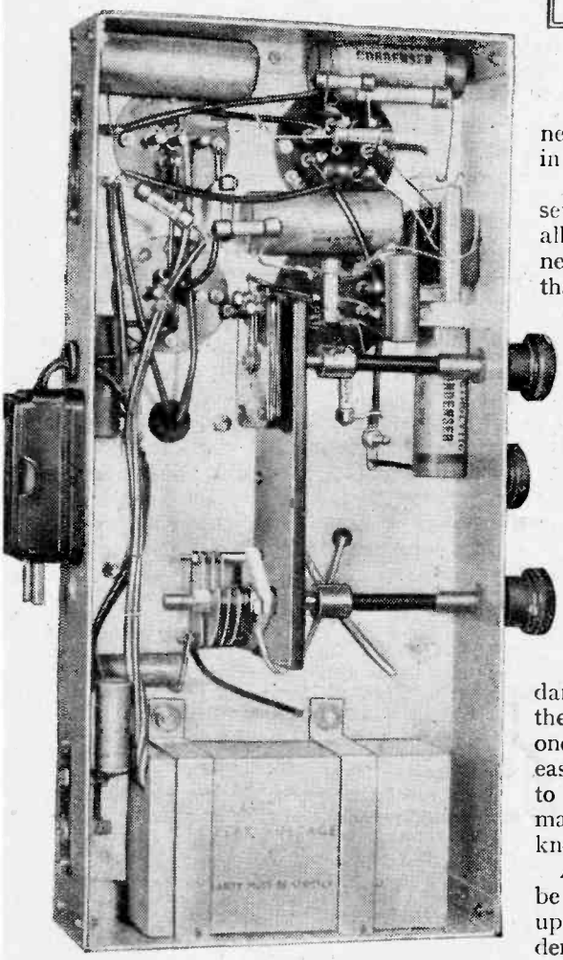

An underview of the receiver, showing the wiring.

Both the receiver valves are of the seven-pin type, and it will be noted that all sockets on the valve-holders have connections made to them, in spite of the fact that in the valves some of the pins are left blank. This is done merely because the blank sockets afford convenient anchorage points for supporting small components.

Operating the Receiver

When using the receiver it must be remembered that the whole chassis and all metal parts connected to it are live to the mains. It should, therefore, be included in a cabinet of some form so that accidental contact cannot be made with it. Actually, there is hardly any danger of a shock when the negative of the supply mains is earthed, but unless one is well insulated from earth, one can easily get a shock if the positive happens to be earthed. One should, therefore, make certain that the grub screws in the knobs are well countersunk.

A good aerial and earth should naturally be used with the set, and when setting it up for the first time set the reaction condenser C3 at minimum and also C2. With the switch S1 set for the medium waveband, and with minimum negative feedback, i.e., with R6 fully rotated in a clockwise direction, it should be possible to tune in the local station, if this is within 20 miles or so. At shorter distances than this the local will probably be very strong indeed, and it can then be reduced by adjusting R6.

For local reception the aim should be, for the best quality, to keep R6 at such a setting that the gain is considerably below the maximum, but it is not necessary to reduce the gain by the full extent provided by this control. More negative feedback is obtainable than is normally necessary, and this has been done to cater for those districts where the local station is so strong that a volume control is necessary in order to reduce it. R6 is probably best looked upon as an AF volume control of a type which improves the quality of reproduction as the volume level is decreased. At such distances from the local that the required volume can only be obtained without reaction when R6 is set for maximum gain, it will usually be found that better quality can be secured, and also greater freedom from any interference, by reducing the volume on R6 and bringing it back by the application of reaction. For anything but local reception R6 should be set for maximum gain, and it will usually be necessary to use critical reaction.

Before searching for other stations,

A full-size blue print of the wiring diagram is available from the Publishers, Dorset House, Stamford Street, London, S.E.1., price 1s. 6d., post free.

AC/DC LOCAL STATION SET : THE LIST OF PARTS REQUIRED

		s.	d.
1 Choke, 20H, 60 mA, 450 ohms (Maker's rating 15 H, 100 mA.)	**Bulgin LF215**	15	0
1 Midget LF transformer, 4 : 1	**Bulgin LF33**	4	6
1 Variable condenser, 0.0005 mfd.	**Polar 5**	4	6
1 Dial for above	**Polar VP Horizontal Drive**	6	6
1 Differential reaction condenser, 0.0003 mfd.	**Bulgin N24**	3	0
1 Variable condenser, 15 mmfds.	**Webb's "Apex Economy"**	1	6
Fixed condensers:			
1 0.0001 mfd., 350 volts DC working, tubular	**Dubilier 4601/S**	1	0
1 0.0005 mfd., 350 volts DC working, tubular	**Dubilier 4601/S**	1	0
1 0.001 mfd., 350 volts DC working, tubular	**Dubilier 4601/S**	1	0
1 0.01 mfd., 350 volts DC working, tubular	**Dubilier 4601/S**	1	0
1 0.1 mfd., 350 volts DC working, tubular	**Dubilier 4603/S**	1	4
2 0.5 mfd., 350 volts DC working, tubular	**Dubilier 4608/S**	4	0
2 50 mfds., 12 volts peak working, electrolytic	**Dubilier 3016**	4	6
1 8-8-8 mfds., 500 volts peak working, electrolytic	**Dubilier 316**	7	6
Resistances:			
2 50 ohms, ½ watt	**Dubilier F½**	1	0
1 500 ohms, ½ watt	**Dubilier F½**		6
1 10,000 ohms, ½ watt	**Dubilier F½**		6
1 20,000 ohms, ½ watt	**Dubilier F½**		6
1 40,000 ohms, ½ watt	**Dubilier F½**		6
1 50,000 ohms, ½ watt	**Dubilier F½**		6
1 250,000 ohms, ½ watt	**Dubilier F½**		6
1 250 ohms, 1 watt	**Dubilier F1**	1	0
1 Potentiometer, wire wound, 10,000 ohms	**Reliance "TW"**	4	6

		s.	d.
1 Valve holder, 4-pin (without terminals)	**Clix Chassis Mounting Standard Type VI**		5
1 Valve holder, 5-pin (without terminals)	**Clix Chassis Mounting Standard Type VI**		6
2 Valve holders, 7-pin (without terminals)	**Clix Chassis Mounting Standard Type V2**	1	6
1 Switch, 4-point, rotary	**Bulgin S116**	2	9
1 Fused mains input connector with 1 amp. fuses	**Belling-Lee 1114**	4	3
2 Skeleton terminal strips, 2-way "A-E" and "LS"	**Bulgin T10**	1	0
1 Plug-top valve connector	**Belling-Lee 1175**		1
2 Couplers, ¼in.	**Bulgin 2005**		6
2 Panel bushes, ¼in.	**Bulgin 1048**		6
2 Knobs	**Bulgin K14**		9
1 Set of coils	**B.T.S.**	9	6
or materials: Small quantity No. 34 and 36 DSC wire; 1 4in. length ebonite or paxolin tube, 2in. diameter, ⅛in. wall; 3 paxolin discs 2in. diameter, 1/16in. thick, 2 paxolin discs 1½in. diameter, 1/16in. thick, 2 paxolin discs 1½in. diameter, ⅛in. thick, 1 paxolin disc 1¼in. diameter, ⅛in. thick.			
Chassis:	**B.T.S.**	12	6
Miscellaneous:	**Peto-Scott**		
5 lengths systoflex; small quantity No. 18 tinned copper wire; paxolin strip; 2 3in. lengths ¼in. paxolin rod.			
Screws: 40 ¼in. 6BA R/hd.; 4 ½in. 6BA R/hd.; 5 ½in. 4BA R/hd.; 2 ¾in. 4BA, all with nuts and washers.			
Valves:			
1 HL1320	**Mazda**	9	6
1 Pen 3520	**Mazda**	13	6
1 U4020	**Mazda**	10	6
1 C1c barretter, 4-pin	**Philips**	10	0

however, it is as well to adjust C2 on the local station while using very little, if any, reaction. When the set is tuned to the local it should be found, on rotating C2, that there is a point at which the local disappears or is at minimum. To adjust C2 for optimum rejection of the local, leave it at this point, then try to tune in the local again on C1, this time using reaction. Then readjust C2; its setting will now be much more critical. On tuning away from the local little or no trace of it should now be obtainable, but signals on neighbouring channels will naturally be greatly weakened, so that, in practice, better results are often secured when C2 is adjusted to a compromise setting.

If one is searching for a station on a longer wavelength than the local, for instance, it will probably pay to keep C2 at a slightly lower capacity setting than the optimum for rejection of the local, while if one is trying to get a station on a lower wavelength, then a slightly higher capacity for C2 is often advisable. Unfortunately, the settings of C1, C2 and C3 are all to some degree interdependent, and some skill in operation is naturally required to obtain the best results. This is one of the penalties which must be paid for the attainment of the optimum performance from a receiver of such simple type.

VOLTAGES AND CURRENTS

Valve	Anode Volts	Screen Volts	Cathode Volts	Anode Current mA.	Screen Current mA.
Pen 3520	190	196	8.5	28.0	6.0
HL 1320	55	—	0.9	2.0	—

Mains = 220 volts DC

On the long waveband it will be found that C2 has comparatively little effect, and under normal circumstances it will not be possible to obtain a definite balance point on Droitwich. This is because C2 is hardly large enough to provide a balance against the mutual inductance between L4 and L5, and this mutual inductance is necessary for adequate signal strength. A larger capacity for this condenser could, of course, be used, but it would then have a serious detuning effect upon the secondary and would complicate the switching. In practice, the arrangement adopted proved quite satisfactory.

The Receiver on Test

The receiver has been tested in the heart of London and gave a surprisingly good account of itself. The London Regional transmission was of great strength, and adequate volume was obtained with full negative feedback. The London National is a much weaker signal, and it was necessary to use either a considerable degree of reaction or considerably less than the full negative feedback. On the long waveband Droitwich was strong and considerable negative feedback could be used. These three stations, therefore, proved capable of providing high-quality reproduction without any critical adjustment of the controls. Plenty of other stations could be secured, however, with R6 set for maximum gain and critical reaction. In daylight, North Regional, Cologne and Brussels gave good loud speaker signals, and it was even possible to receive Fécamp, while both the local stations were working, without any noticeable interference. On the long waveband Radio Paris and Luxembourg could be received with only a trace of interference from Droitwich, and Hilversum was clear.

In spite of there being so many stations obtainable, the receiver is essentially a local-station set. Although it is possible under suitable conditions to obtain a number of distant stations, fairly skilful handling is needed.

In conclusion, it may be said that the dial normally supplied carries a scale calibrated in wavelength. This calibration is not accurate for this receiver, for it has not been convenient to adopt precisely the values of inductance and stray circuit capacity for which the calibration has been prepared. A scale marked in degrees is, however, obtainable to special order, and this is recommended.

The Radio Industry

BEETHOVEN RADIO, LTD., has amalgamated with the Wilkes Berger Engineering Company, Ltd., of Birmingham and London; the title of the company has been changed to Beethoven Electrical Equipment, Ltd., but the address remains unchanged. As a result of the amalgamation, Beethoven will be able to take advantage of the Wilkes, Berger facilities for the production of metal parts of all kinds, and in many instances will become independent of outside sources of supply.

◇ ◇ ◇ ◇

The telephone number of the Exide-Drydex London Office has been changed to Victoria 2299.

◇ ◇ ◇ ◇

Change of address: Radio Transmission Equipment, Ltd., to 45, Nightingale Lane, Balham, London, S.W.12.

DF in the AIR

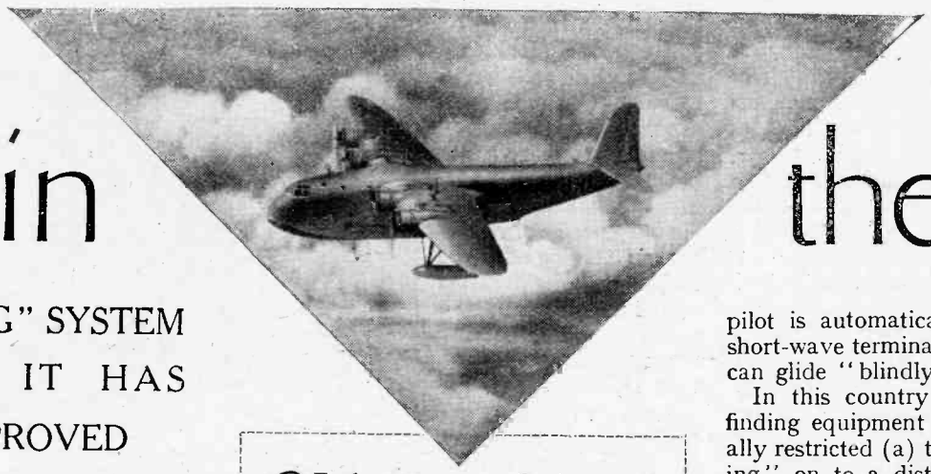

THE "HOMING" SYSTEM AND HOW IT HAS BEEN IMPROVED

OF the many contributions made by wireless towards safer aerial navigation, few are more attractive than the "homing" system, which is devised to guide a pilot to his destination even in the worst conditions of visibility. How some of the limitations of this method are being overcome is described in this article.

THE future of commercial flying must depend, in the long run, upon the maintenance of a regular service in all kinds of weather, without incurring more risk to life than any other form of transport. Here the chief obstacle, particularly in our northern climate, is fog, which is a nuisance to travellers generally, but a very definite source of danger to those who use the air.

When visibility shrinks to a mere yard or two, wheeled transport can slow down to a crawl, or can come to a dead stop, if necessary, until conditions improve. And the same applies, though admittedly to a lesser extent, to the mariner at sea. But the airman is up against a much tougher proposition. He can find safety by flying out of the fog-bound area, provided he has petrol enough. Or he can cruise about in the hope that visibility will improve before his tank runs dry. The only other alternative is to take the risk of trying to land against pretty heavy odds.

Wireless has already done much to lessen whatever margin of risk is run by those who favour the airway, and it could do much more if finances permitted every aerodrome to be fitted with up-to-date DF beacons and blind-landing gear. But, unfortunately, such equipment is the exception rather than the rule in this country.

Thanks, however, to existing wireless facilities, weather reports can now be collected along the route and given to the pilot before he leaves the aerodrome. Should sudden changes of weather occur, or any unforeseen contingency arise after he has taken off, this information can be transmitted to the machine whilst in the air. Most passenger machines, too, are fitted with transmitters which give long-range telegraphic and shorter-range telephonic communication with the ground, so that the pilot can report progress from time to time, or call for any special information he may require. If, for instance, he finds himself above low-lying clouds on approaching his destination, he can ask for the height of the ceiling.

As regards more modern aids to air navigation, we have not kept pace with the progress made, say, in America, where the practice is to "chart" all the main air routes with overlapping wireless beams which are "keyed" to give a characteristic signal along the median line. This enables a pilot to keep his course in any kind of weather, simply by the indications given by his radio instruments, without reference to external visibility. At his destination the pilot is automatically shepherded into a short-wave terminal beam, down which he can glide "blindly" but safely to earth.

In this country the use of direction-finding equipment for aviation is practically restricted (a) to equipment for "homing" on to a distant radio beacon, and (b) to the use of DF land stations, which take bearings on the signals radiated from an aeroplane in flight, and after plotting its position transmit this information in code back to the pilot.

Both these methods have definite limitations. For instance, it takes some minutes for two land stations to take cross-bearings on the same aeroplane, to plot them out on a map, and to send back the result to the pilot. By the time the latter has got this information, he is many miles away from the point on which the bearings were taken, and they are so much the less value to him.

The principle of "homing" or flying straight on to a distant beacon transmitter is based on the well-known fact that a frame aerial picks up maximum signal strength only when it is pointed directly towards the transmitter. If the pilot then flies so that he always keeps the received signal at its strongest, he knows that his machine is headed towards the distant beacon, and that he must ultimately arrive there.

A frame aerial similarly gives "zero" or minimum signal strength when its windings are dead across the line of the distant transmitter, and this position is the more critical of the two. But since it is difficult to determine the absence of a signal in a noisy aeroplane, a useful compromise is to

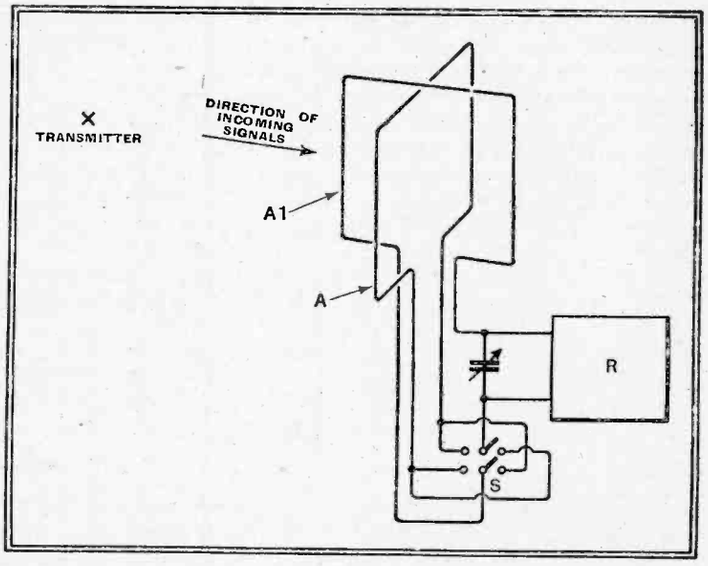

Fig. 1.—Two "crossed" frames for homing.

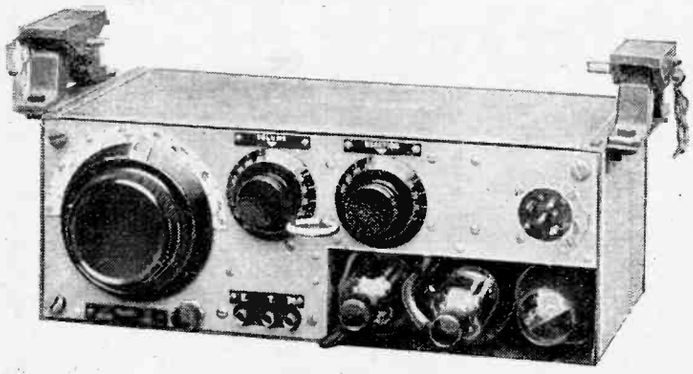

A Marconi "straight" aircraft receiver covering waves between 600 and 1,550 metres in two steps.

DF in the Air—

install two frame aerials, set at right angles to each other, and connected through a reversing switch to the headphones or other indicator.

As shown, for instance, in Fig. 1, the frame windings A may be mounted on the wings to lie across the main axis or "lubber line" of the machine, whilst the aerial A1 is wound round the struts so that its plane lies fore-and-aft of the machine. The two sets of windings are not independent of each other, but are joined through a reversing switch S, which on one side connects them in series, and on the other side in opposition, to the receiver R.

If the aerial A1 is pointing directly to the transmitter, then the aerial A receives no energy, since it is in the "zero" position, and the strength of the incoming signal remains constant on both sides of the reversing switch. Should the machine, however, yaw to one side or other of the direct line, then the aerial A begins to collect energy, which is added to the pick-up from aerial A1 on one side of the switch, and is subtracted from it when the switch is changed over. Any difference in the received signal strength, when the reversing switch is operated, accordingly warns the pilot that he is flying off his course.

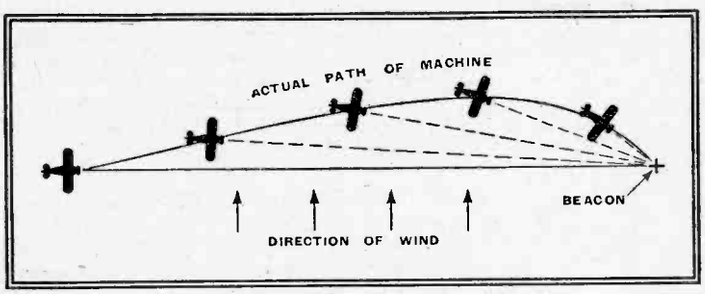

Fig. 2.—Showing the effect of a side wind.

Correcting for Drift

Unfortunately, this method of navigation is somewhat handicapped by the presence of a side wind. As shown in Fig. 2, such a wind produces a lateral "drift" which imparts to the machine a "crablike" motion, so that in spite of always flying to maximum signal strength the pilot is beguiled into following the curved path of approach indicated in dotted lines.

The difficulty can be overcome by using an arrangement such as that shown in Fig. 3 (a) and (b), where the pick-up from an open or non-directional aerial A is combined with that from a frame aerial A1 through a constantly-operated reversing switch S. When the arm of the switch is on the upper contact 1, signals from the open aerial A flow down through the coil L to earth, while on the lower contact they flow up through the coil L1 to earth. In other words, the coupling of the aerial A with the frame aerial A1 is constantly being reversed in phase.

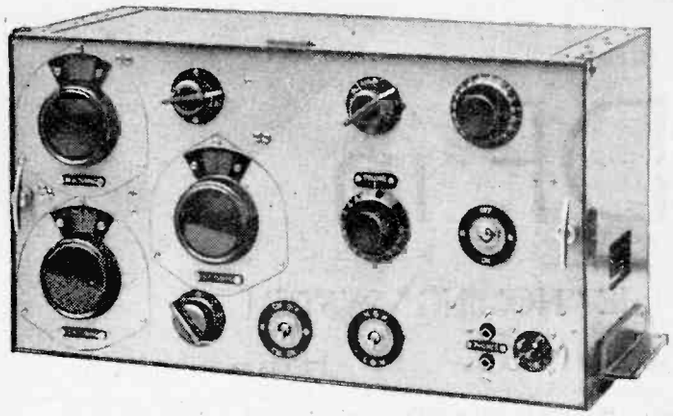

Marconi short-medium wave aircraft receiver which includes direction-finding facilities on the medium band.

In the position 1 of the switch the combined currents produce the well-known heart-shaped curve C shown in Fig. 3 (c), while in the position 2, owing to the reversal in phase, the direction of the heart-shaped curve changes over to that shown at C1. So long as the two curves are equal, the machine is flying on the direct "homing" line.

Directional Bias

Fig. 3 (b) shows how the effect of a side wind can automatically be compensated. The pilot adjusts the position of a contact K bridging two resistances R, R1 (included in both branches of the coupling circuit L, L1 shown in Fig. 3 (a) so that more resistance is left in one branch than the other. The amplitude of the signals received on one side of the switch is thus reduced relatively to that received on the other, as shown in dotted lines in Fig. 3 (c), so as to apply a definite compensating "bias" to the indicator. The adjustment of the bridge K is made with the help of a calibrated "drift-correction" scale. Once it has been set the pilot can continue flying, either to constant signal strength, or so as to keep his radio indicator at zero, knowing that his course is being automatically corrected for "drift."

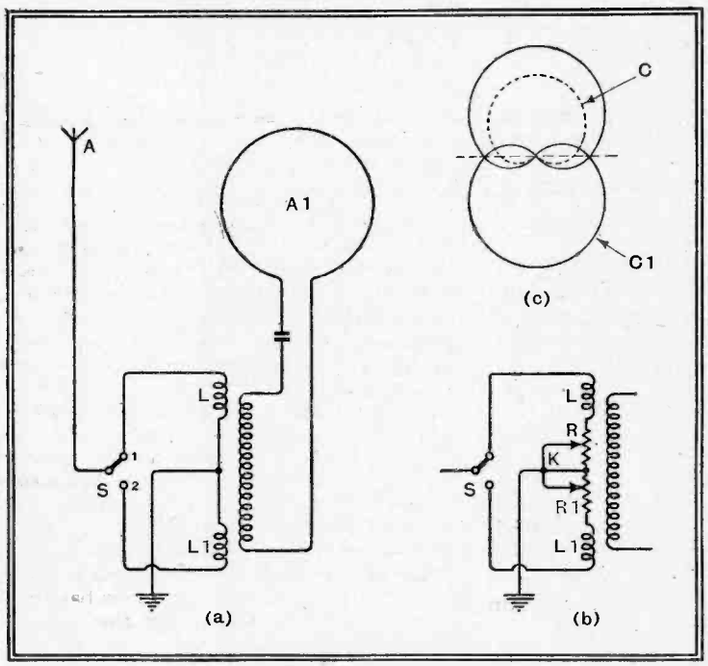

Fig. 3.—Automatic correction for "drift."

In aircraft practice, all DF indications should be shown on a moving needle or other form of visual indicator, so as to avoid the strain of wearing headphones and constantly listening for changes in signal strength. Fig. 4 shows how this can be done. The pick-up from the frame aerial A is first combined with that from an

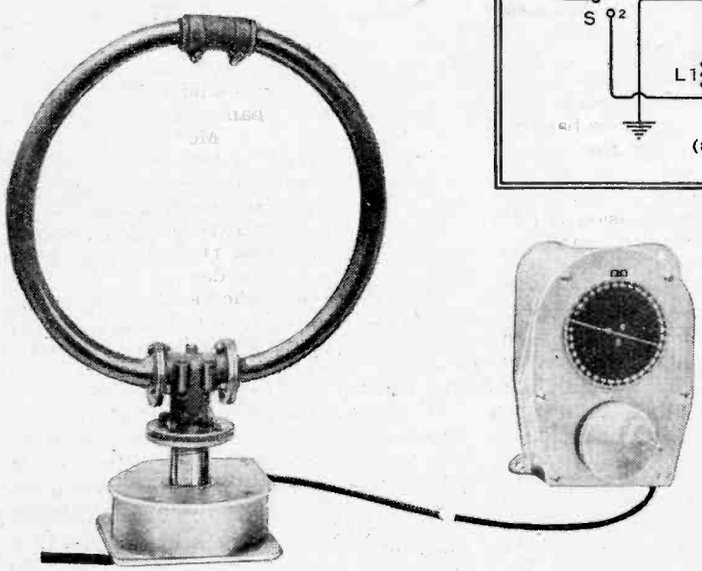

This 13-inch loop, made by Marconi's W.T. Company, is remotely controlled from any convenient point by means of a flexible cable.

DF in the Air—

open aerial A1 and then fed to a visual indicator through rotating switches which are driven at constant speed from a motor M. At one moment, the pick-up from the open aerial is combined with that from the frame through the lead K and coil L, while at the next the connection is reversed, and the non-directional signals pass via lead K1 and coil L1 to earth.

Since the phase of the coupling between the two aerials is constantly reversed, two opposed heart-shaped curves are produced similar to those already shown in Fig. 3 (c). The combined aerial currents are passed through an amplifier-detector D, and the rectified impulses are applied to the indicator I through the two insulated halves of a commutator which is mounted on the same shaft and driven at the same speed as the rotating switch.

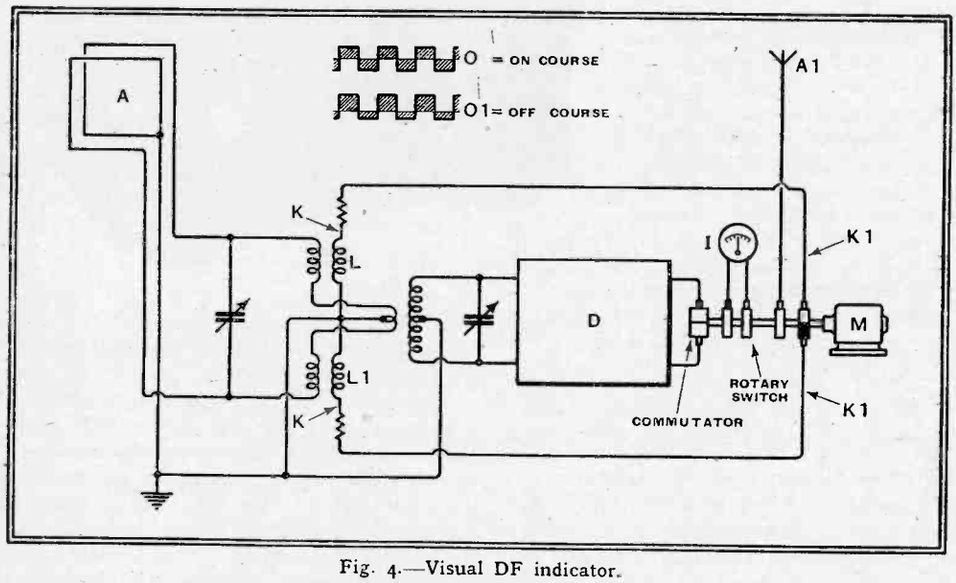

Fig. 4.—Visual DF indicator.

So long as the pilot keeps strictly to the homing line, the frame aerial A will be in the minimum position and will pick up no energy. The open aerial A1, on the other hand, receives constant signal strength, and the rectified pulses applied to the indicator I are, therefore, equal in amplitude, but opposed in direction, as shown by the shaded squares O at the top of Fig. 4. Owing to the rapidity with which the reversing switch is operated, and to the natural inertia of the indicator needle, the latter will make no response under these conditions; but will remain steady at the zero point on the dial.

If, however, the machine yaws to one side or other of the homing line, the frame aerial A begins to pick up energy which, by the action of the reversing switch, is at one moment added to, and at the next subtracted from the constant signal voltage from the non-directional aerial. The rectified impulses from the detector are now unequal in amplitude, as shown by the shaded squares at O1 at the top of Fig. 4, and the indicator needle is accordingly deflected. The direction in which it moves over the dial tells the pilot whether to steer to port or starboard in order to get back on his proper course.

On the Short Waves

My forecast that short-wave conditions on the higher frequencies (i.e., above 7 or 8 Mc/s by night and above 21 or 22 Mc/s by day) would remain poor for approximately three months from November last seems more than ever likely to be fulfilled.

This prediction, as originally stated, was based on the solar eleven-year cycle which had its maximum in 1905-06, and which was in many respects similar to the present one, now almost at its maximum.

Actually, short-wave conditions are not really poor; all that is actually happening is that night-time optimum frequencies are inconveniently low, changing rapidly from about 15 Mc/s, and sometimes higher, at 7 p.m. to 8 Mc/s and lower an hour later.

On many good nights, such as Tuesday, January 11th, the useful spectrum extends just down to the 31-metre band, and on these occasions the 6 Mc/s band is productive of very good signals. W8XAL, on 6.06 Mc/s, in fact, had been wholly intelligible during the last hour of listening.

It seems rather a pity that the 6 Mc/s band is so overcrowded with stations intending primarily to give a local service, since under the particular late evening conditions which have prevailed recently, this has been the only band suitable for inter-Continental broadcasting.

It should be remembered here that in the sunspot minimum years even this band will be too high in frequency for the B.B.C.'s Empire service to Canada, and for this reason one understands that a special frequency for late night transmission is being sought at Cairo. I have also heard that, paradoxically, there is some opposition to the B.B.C.'s proposals for improving the position of the short-wave broadcasters.

In view of the tremendous need for the most efficient Empire short-wave service possible under present world conditions one feels that this report must be false, especially in view of the recent inauguration of the broadcasts in Arabic.

These broadcasts have received wide publicity in the daily Press, from which it is apparent that, in dealing with modern short-wave broadcasting, the popular Press generally succeeds in getting well out of its depth, especially when mentioning the more intricate details, such as frequency and direction of radiation, not to mention receivers which are pre-tuned and locked to one particular station.

In addition, no mention is made of the different kind of service given by Bari in the medium waveband and Daventry GSC in the 31-metre band.

Before passing to more practical things, it is worth while to record that VK3LR is now known as VLR, but that the early morning directional broadcasts to England have been dropped in view of "lack of support."

Did anybody see the experimental Marconi "beam" valve shown at the Physical Society's Exhibition? In this radically new valve the anode is just a strip of metal placed opposite to a small slot in a metallic screen; connected as a triode it will oscillate down to 75 cms. in a normal feed-back circuit. This seems to be a valve with a future. In the form in which it was exhibited an octal-base was fitted, with the anode connected to the top cap, the control electrodes being in the form of three-quarter concentric deflecting plates.

Calibrating Receivers

Finally, how can one locate the various broadcasting bands on a new (home-made) uncalibrated receiver?

Obviously, the best way, when one is familiar with the morse code, is to use some of the stronger and well-known point-to-point telegraph stations as markers. Many of these stations during idle periods send out their call sign continuously.

For locating the 13-metre band, either LSV2 Buenos Aires on 21.11 Mc/s or PPX Rio on 20.72 Mc/s should be used; for the 17-metre band LQC Buenos Aires or 17.66 Mc/s or OEV Vienna on 17.87 Mc/s are useful. Between these bands most afternoons and early evenings two powerful trans-Atlantic telephone stations with wobbled carriers will be heard; these are the Lawrenceville transmitter WKN on 19.82 Mc/s and WKF on 19.22 Mc/s.

Nearer to the 17-metre band WLA on 18.34 Mc/s may be found with its companion 'phone transmitter CGA Montreal on 18.18 Mc/s.

The 19-metre band can best be located from its proximity to the 21-metre amateur band, but a good "spot" frequency is supplied by WDT Brentwood, N.Y., on 15.385 Mc/s.

An additional point is often given by the Vatican transmitter HVJ on 15.12 Mc/s, which is readily identifiable, and is, of course, in the 15 Mc/s band.

The 25-metre band can be located by SUW Cairo on 11.91 Mc/s at the high-frequency end, but in the London area the very strong signal from Daventry GSD after 5.17 p.m. should be a useful pointer.

Above this band rough, strong signals from FYR Lyons on 11.65 Mc/s are generally the order of the day.

Identification of the 31-metre band should be relatively easy, the twins DJA-DJN, separated by only 20 Kc/s, being very good markers most of the day, additional proof being obtained from OZF on 9.52 Mc/s. In the evening W2XAF plus a 5 Kc/s heterodyne from Tokio JZI at the low-frequency end, and WIXK with characteristic hum at the high-frequency end, should afford further evidence, not to mention Arabic on GSC 9.58 Mc/s between 5.17 and 6.15 p.m. nightly.

ETHACOMBER.

Lissen "Monarch"

MODEL 8322

An Inexpensive Radiogramophone With a Lively Performance

THERE is certainly a lot of set for the money in this latest addition to the Lissen range of receivers. The over-all dimensions of the cabinet are 30 × 28 × 14½in. It is constructed of walnut-veneered plywood, and is of pleasing proportions. Not the least attractive feature of the design is the flush motor-board and control panel which leaves no corner to trap dust.

The performance in every way lives up to the appearance of the set. The loud speaker is small but efficient, and the 2 watts available from the output valve are more than sufficient to give a volume in keeping with the size of the cabinet. Harmonic content is low, and the reproduction has a clear "forward" quality which was the subject of favourable comment by all those who availed themselves of the opportunity of trying out the set.

The depth of the cabinet from back to front bears the conventional relationship to the other dimensions, but by leaving the back open and lining the sides and bottom with sound-absorbing material the makers have kept wood and air-column resonances under control. It would be idle to deny that a degree of cabinet resonance exists, but it has been skilfully applied to the advantage of the reproduction of music, and does not obtrude itself on speech unless the volume is increased to an unnatural level. The fact that the apparent volume is considerably affected by the tone control indicates that the high-frequency cut-off can be made to extend well down into the middle register. In our opinion, the best balance was obtained with the control about one-quarter of its range down from the position of maximum high-note response.

FEATURES. ***Type.***—*All-wave superheterodyne radiogramophone for AC mains.* ***Waveranges.***—*(1) 19-50 metres. (2) 198-580 metres. (3) 850-1,920 metres.* ***Circuit.***—*Triode-hexode frequency-changer—var.-mu pentode IF amplifier—double-diode-triode second detector—pentode output valve. Full-wave valve rectifier.* ***Controls.***—*(1) Tuning. (2) Volume and on-off switch. (3) Tone. (4) Waverange and gramo switch.* ***Price.***—*£16 19s. 6d.* ***Makers.***—*Lissen Ltd., Angel Road, Edmonton, London, N.18.*

Gramophone reproduction is also characterised by brightness and clarity, and here again we find no evidence of excessive bass resonance. The tone control as well as the volume control is available for the reproduction of records. A gramophone motor switch is incorporated in the tone arm, and there is a speed control as well as an automatic switch actuated by the run-off groove.

The horizontal tuning scale although not provided with fashionable changing lights to indicate the waverange in use, is, nevertheless, exceptionally clear and easy to read. The short-wave range, incidentally, is calibrated in megacycles as well as in metres. The tuning condenser is driven by a single-ratio reduction gear which is ideal for the short-wave range, but rather on the high side for medium and long waves. On the other

A small internal aerial is permanently connected to the receiver, but external aerials of the inverted "L" or di-pole type may also be used. The bias circuit of the output valve is arranged to provide a degree of negative feed-back.

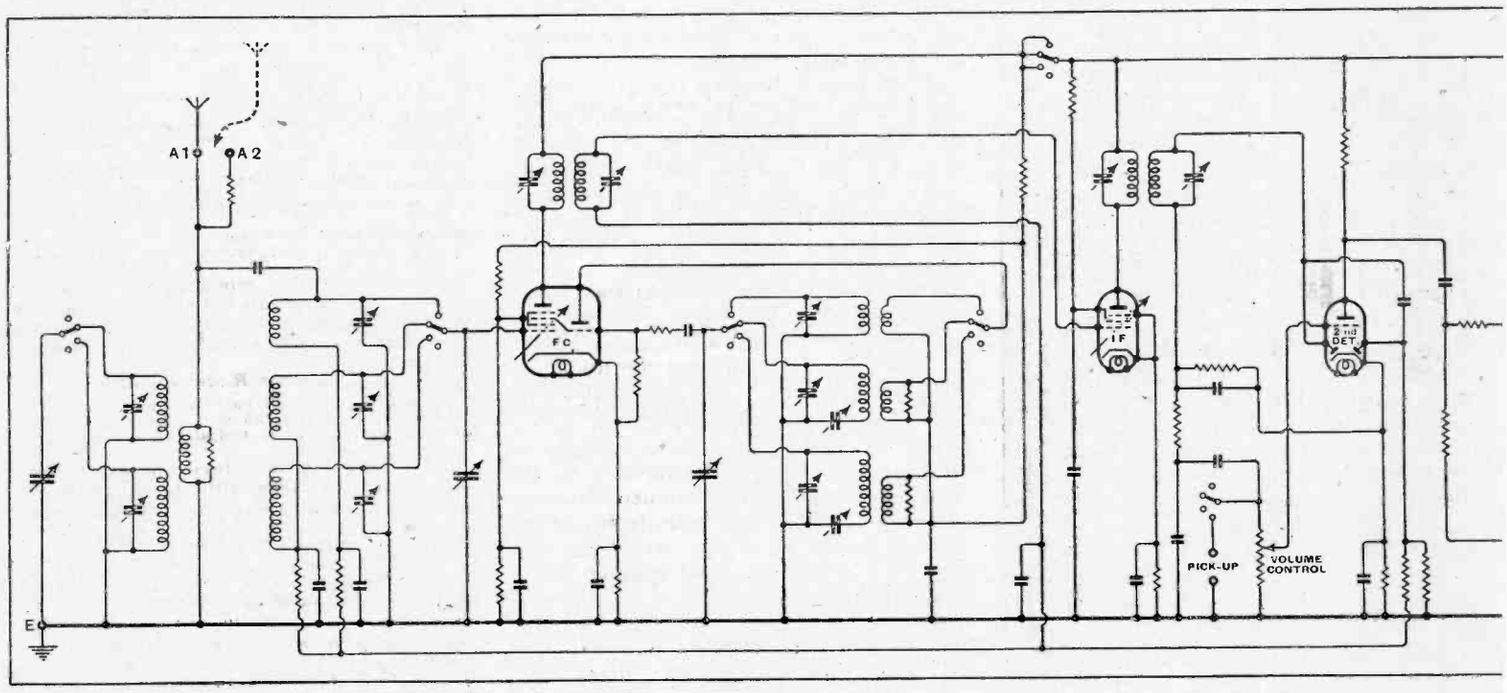

hand, its simplicity promises reliability over a long period of use.

The receiver gave an excellent account of itself on the internal aerial provided. On the medium-wave band a wide choice of Continental stations was available throughout the range of the dial, and on long waves the increase of sensitivity towards the top end of the scale gave a performance on such stations as Luxembourg, Droitwich and Radio-Paris which was surprisingly high having regard to the ratio of aerial size to the wavelength. As might be expected, the short-wave range produced the best results when using the internal aerial only, and the signal strength obtained from Schenectady would have deceived most people into thinking that an outdoor aerial was attached.

When a full-size aerial was connected (the volume control being left at maximum) the programme from this station was interrupted by a flutter which was probably due to motor-boating in the presence of a strong carrier. At all events, the effect disappeared when the volume was decreased. At no time was there any sign of microphonic feed-back on the short-wave range, and second-channel interference was low, with the result that repeat tuning points could not be found even for the more powerful transmissions.

Selectivity

On the medium-wave band the sensitivity is uniform throughout the range, and no second-channel whistles could be found. The selectivity is sufficient to give clear reception outside one channel on either side of London Regional when using the set in Central London, and the selectivity is sensibly the same whether the set is used on the internal aerial alone or with the addition of an outdoor aerial. On long waves the selectivity is hardly sufficient to ensure satisfactory reception of the Deutschlandsender, but all the other important stations on the long-wave band are received without sideband interference.

An inductively coupled band-pass filter precedes the triode-hexode frequency-changer on medium and long waves. On short waves a single tuned circuit is used with a small capacity coupling to the aerial. The IF stage operates at 455 kc/s and employs a variable-mu pentode. A double-diode-triode performs the functions of second detector, AVC rectifier and first AF amplifier. The output pentode valve is resistance-coupled to the preceding stage, and the cathode bias circuit, which is without the usual by-pass condenser, is arranged to provide a degree of negative feed-back of the so-called constant-current type.

The chassis is mounted vertically, and all the valves are accessible, but the same cannot be said of the mains voltage adjustment, which is mounted on the underside of the transformer. The terminal panel, which is attached to a stiffening batten across the back of the cabinet, carries an auxiliary aerial socket, connected to the coil through a high resistance, for use within a radius of five miles from a main B.B.C. station. Sockets are also provided for an external loud speaker which should be fitted with an output transformer presenting an impedance of 7,000 ohms to the output terminals.

There can be no doubt that this instrument represents excellent value for money, and in particular we would congratulate the designers on the skilful handling of a cabinet of conventional proportions to keep under control any tendency to an obtrusive bass response.

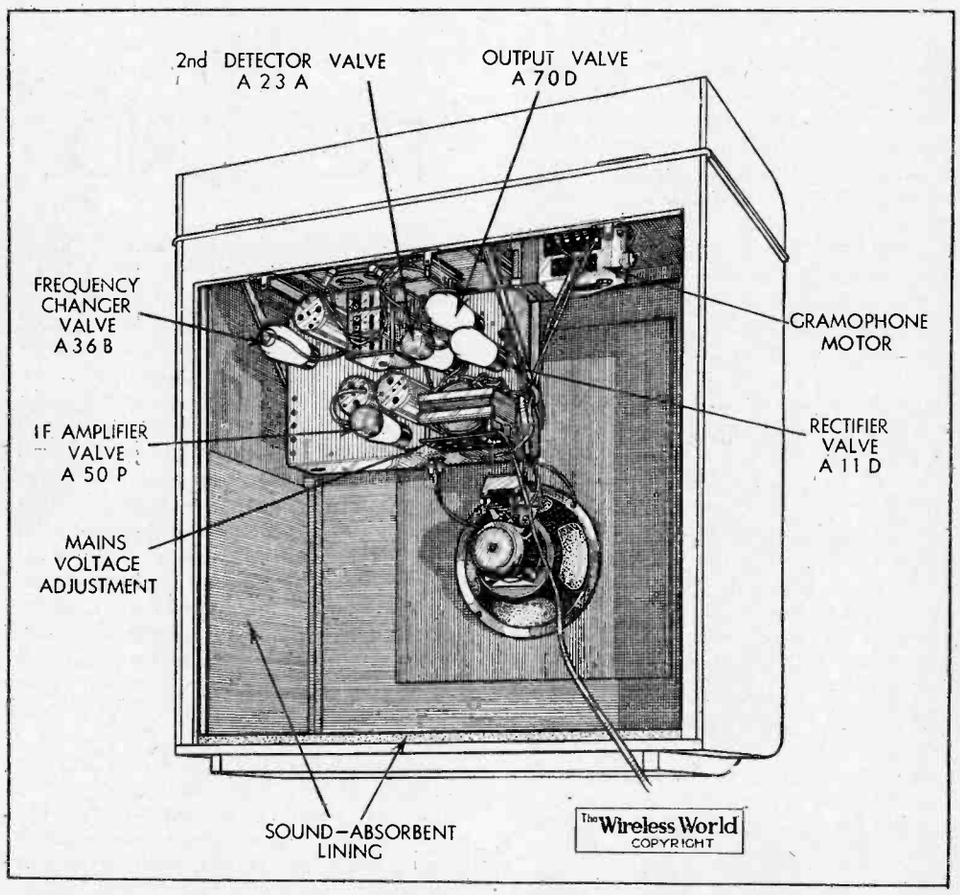

General view of the interior of the cabinet. A stiffening batten carrying the aerial and external loud speaker sockets has been removed to permit a clear view of the chassis layout.

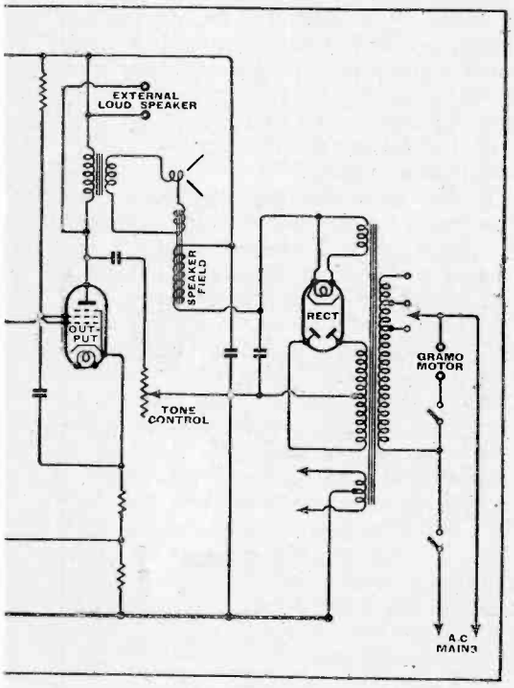

News from the Clubs

Edgware Short-wave Society

Headquarters: 40, Raeburn Road, Edgware.
Meetings: Sundays 11 a.m. and Wednesdays 8 p.m.
Hon. Sec.: Mr. G. Yale, 40, Raeburn Road, Edgware.

The annual general meeting, at which officers were elected for the year, was held recently. The society's transmitter is now working on 40 metres using telephony. The call-sign is G2DDK. Mr. Youthed has promised some testing equipment to the club.

Croydon Radio Society

Headquarters: St. Peter's Hall, Ledbury Road, South Croydon.
Meetings: Tuesdays at 8 p.m.
Hon. Pub. Sec.: Mr. E. L. Cumbers, 14, Campden Road, South Croydon.

On January 25th a representative of Lissen, Ltd., will give a lecture entitled "Hi-Q Short-wave Components." That firm's six-valve AC four waveband superhet will be demonstrated.

Maidstone Amateur Radio Society

Headquarters: 244, Upper Fant Road, Maidstone.
Meetings: Tuesdays at 7.45 p.m.
Hon. Sec.: Mr. P. M. S. Hedgeland, 8, Hayle Road, Maidstone, Kent.

The society has now been affiliated to the Radio Society of Great Britain. The first annual general meeting was held on January 11th.

Brentwood Amateur Radio Society

Hon. Sec.: Mr. J. R. D. Sainsbury, "Brunook," Crossways, Shenfield, Essex.

The second annual general meeting was held on January 9th. A technical sub-committee is now considering the design of a transmitter. There are four members with full licences and seven with artificial aerial permits.

UNBIASED

By FREE GRID

June in January

AS I was passing along one of the principal streets in one of our large cities early the other morning I was somewhat surprised to see seething masses of hysterical women struggling to get through the doors of sundry large drapery shops, and in the process indulging in the favourite feminine tactics of forcing their way through a crowd by the simple expedient of sticking a hatpin into the back of the person in front.

For the moment I thought that we must be in the middle of a war which had slipped my memory and that the women were merely taking cover as a result of an air raid warning; indeed, I was so convinced of this that I began to rummage through my pockets for my gas mask. After fishing out a motley collection of unpaid bills and final demands, I chanced to glance up at the shop windows, and was at once reassured by a large placard announcing that once more our great female body-wear emporiums were engaged in their bi-annual, panic-stricken efforts to get rid of their stocks of —— (Censored. —ED.) before the fashions changed.

A favourite feminine tactic.

This sudden realisation that the January sales were on not unnaturally reminded me that January was here and that Christmas and the New Year must, therefore, be things of the past. Quite logically, my train of thought glided smoothly and imperceptibly to thoughts of spring and its attendant delights. I am, I fear, far too old and disillusioned for my mind to "lightly turn to thoughts of love," or words to that effect, which some wretched poet or other once wrote. What my thoughts *did* turn to, however, was a very remarkable application of wireless principles which an old friend demonstrated to me when staying with him last summer.

My friend is a retired Government contractor, and has naturally, therefore, bought a large estate in the country with his ill-gotten gains. We happened to be taking tea one afternoon when my attention was arrested by the beautiful singing of the birds which seemed to be almost inside the room in which we were sitting. Being a country dweller myself I am, of course, fully acquainted with the singing of birds, but I must confess that I have seldom heard such a glorious medley of song in which all the different species of bird to be found in the English countryside seemed to be taking their part.

I was, in fact, just closing my eyes in delight and being mentally wafted away to the land of the lotus eaters when I was rudely awakened by an uncouth voice using extremely coarse language, which seemed to be mingled with the song of the birds. My friend immediately rose in his seat with an exclamation of annoyance, upsetting his teacup all over his trousers in the process. Striding across the room he operated one of a series of small switches on a panel which I had not previously noticed, and immediately the interference was cut out.

It appears that my friend had had the delightful idea of concealing a microphone in the branches of various trees in the woods of his estate, these microphones being placed, as far as possible, near to well-known haunts of birds. The mikes were connected up to a special mixing panel and switchboard, and their combined output passed via a suitable amplifier to concealed loud speakers in the room. In this manner an effect was produced as though all the various species of birds in the woods were gathered together in one place and singing in unison. The coarse voice which I had heard was merely that of one of the gamekeepers standing near to one of the tree microphones, but, fortunately, my friend had made provision for this sort of thing, and was able to switch off the particular microphone concerned.

A Heretic Rebuked

I WAS somewhat surprised to read in a gossip column the other day a remark to the effect that he (the gossip writer) could not help feeling sorry for those poor misguided people who want radio in their bathrooms. It is, of course, this writer who is misguided, and not those enlightened people whom he criticises. I don't know the writer or his name, but he is probably a real old relic of the Victorian Age with skull cap and Dundreary whiskers and surrounded by aspidistras and glass cases of waxed fruit.

I need scarcely tell you that I, in common with all other right-thinking citizens, possess a loud speaker in my bathroom and in every other room and passage of the house as well. Moreover, each of these loud speakers is fed from a separate set, so that the music in any particular room or passage may harmonise with the furnishing and the particular use to which the room is put.

In the bathroom, for instance, a programme is always selected in which music of an aquatic type predominates, such as Handel's water music. In the case of the dining-room, of course, the programme varies according to the meal, the "Roast Beef of Old England" being a favourite dinner item. Needless to say, in the coal cellar the music is of a very robust type, the Anvil Chorus being a prime favourite.

Yet another feature of my installation is that variation is introduced according to the prevailing climatic conditions. On these mornings, of which we have been having quite a lot this winter, when the pavements are like glass, it helps you to preserve a sense of proportion as well as your balance as you go slithering down the garden path to the strains of the "Skaters' Waltz" coming from the porch loud speaker. If your set is sensitive enough you will always be able to pick up on short waves some suitable music for every possible occasion throughout the 24 hours. Even if you don't you can always fall back on a gramophone turntable, since a boy can be engaged quite cheaply to attend to the feeding of the appropriate music, and he can fade in suitable records when appropriate programmes are not available on the air. You should, however, be sure to see that the boy is properly trained, as otherwise very regrettable situations can arise.

Embarrassing moment for the colonel.

In this connection I well recollect on one occasion a most embarrassing moment occurring when I and an irascible old colonel from whom I have expectations were disrobing in my dressing-room. He had been compelled to remain the night with me owing to thick fog, both mental and physical, developing after a dinner party, and was just struggling into one of Mrs. Free Grid's nightgowns—my spare one being in the wash—when the loud speaker caused extreme self-consciousness to both of us by suddenly bellowing out the world-famous theme song from "Irene" entitled "In Your Sweet Little Alice-blue Gown," followed by the scarcely less famous song from the same play where the heroine is examining her Christmas presents and sings "A Little Pink Pettie from Peter."

Improving Receiver Performance

REGENERATION IN THE RF STAGE

By AUSTIN FORSYTH (G6FO)

TO many readers the fact that it is possible to improve considerably the performance of any short-wave receiver fitted with a tuned RF stage by applying regeneration, or "reaction," to that stage will be of considerable interest, as it suggests a useful line of experiment.

The idea is by no means new, and its use in certain of the American communication-type receivers explains why they give such a good account of themselves on wavelengths below 20 metres. This is not to suggest that it is only on the very short waves that RF regeneration is worth using, but the fact is that the effect of it becomes more apparent as the frequency increases. In other words, a receiver using RF regeneration will on 150 metres show no very marked advantages over an exactly similar one without it. But on 30 metres the set with RF regeneration will give a much more sparkling and lively performance, this divergence in performance becoming more noticeable as the frequency gets higher and higher up to, say, 28 Mc/s or 10 metres.

To explain how this happens, consider the grid-filament, or input, impedance of any valve. It is high enough in a modern type of RF pentode to enable the most to be made of any signal on the broadcast or "long-short waves." But as the input frequency to which the set is tuned goes up (wavelength decreases), the value of this impedance becomes rapidly less, with the result that above a certain frequency—depending on the characteristics of the particular valve used—no further amplification can be obtained from the RF stage. This makes it clear why certain RF pentodes and screen-grid valves will not amplify at all below about 15 metres, and exhibit flatness of tuning in even a very carefully designed grid circuit.

Now, if this loss of efficiency can be made up in any way, it follows that the amplification and sharpness of tuning of the RF stage will be improved. The simplest method is to apply feed-back to the RF stage in just the same way as is done in the detector, and if reaction can be successfully used a considerable gain in signal strength should result.

RF regeneration, or reaction, can be applied in various ways, but whatever method is used, obviously the RF valve must not be allowed to oscillate. If it does, telephony signals cannot be resolved by the detector, though CW signals are still readable. One method of obtaining regeneration is to use a separate reactor valve, loosely coupled to the tuned grid circuit of the RF stage and independently controlled. This can be made to give good results in the same way that reaction does when applied to the detector.

THE gain of a radio-frequency amplifier tends to fall off seriously as wavelength is decreased, until a point is reached where the effectiveness of the stage becomes negligible. This article shows how amplification may be improved to a worth-while extent by the application of reaction to the RF stage. The method is applicable to both TRF and superhet receivers.

The simplest method is shown in Fig. 1, where a mains RF pentode has its cathode returned, not direct to the base-line, but to a tap on the grid coil. With a good valve this tap need only be *one turn or less* from the earthed end of the winding, the actual degree of regeneration being controlled on the screen potentiometer R. All other values in the circuit are as normally used, and in a simple type of receiver, without tapped band-spread, it is only necessary to provide a coil-former with an extra pin, or to take out the cathode tap by means of a flexible lead, kept as short as possible, which goes to what was formerly the earth side of the bias resistor. The base-line connection to the latter should, of course, be removed when making the alteration.

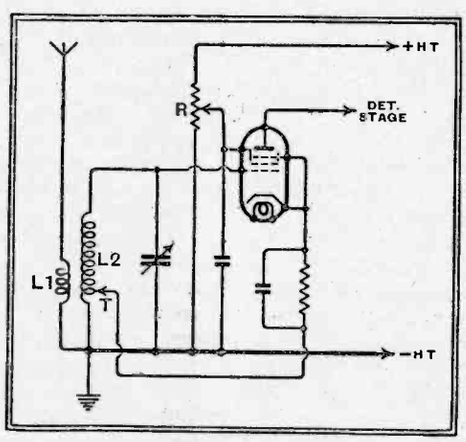

Fig. 1.—Circuit for RF regeneration or reaction, using screened mains pentode. Cathode tap T is made one turn from earth end of L2, or higher if required. R is 50,000-ohm potentiometer. L1 and all other values can be as usual for preliminary tests.

The method of operation is quite simple. A signal is tuned-in in the ordinary way and brought to maximum strength on the detector side. The regeneration control R is then advanced till the RF valve tends to oscillate, the tuning condenser being varied slightly meanwhile, owing to the fact that, as the losses in the RF valve become balanced out by the regeneration effect, the grid circuit tuning sharpens up. When the RF stage has been so adjusted, it will be found that the strength of the signal originally on tune has come up considerably—yes, considerably!—and the lower the wavelength the more marked the effect will be, always assuming that the receiver itself is capable of operating in a stable fashion at that frequency. It is not much use applying RF regeneration to a set which is tricky already on ten metres, as it will only increase the difficulties of control.

There are, of course, certain disadvantages in the use of RF regeneration on the higher frequencies above 28 Mc/s. One is that the adjustment of the regeneration control tends to affect the tune of the signal, in much the same way that a badly adjusted detector reaction circuit will do on, say, 20 metres. It is for this reason that it is always advisable to use cathode-tap regeneration on the RF side, as this has the least tendency to "pull" the tuning; it involves certain difficulties where a battery valve is used, because the filament current has to be fed through chokes in order to keep the "cathode" above earth potential in the RF sense. This is not a serious disadvantage, however, and Fig. 2 shows how to get cathode-tap regeneration with a battery RF pentode. Tuning and adjustment are exactly the same as described previously.

RF Pentodes Best

As regards the use of screen-grid valves in regenerative RF stages, the same circuits can be used, but a pentode will, generally speaking, give better results. The reason here is that the extra screening in the latter prevents the regeneration and tuning of the stage affecting the detector circuit. With a valve having poor internal screening, the detector reaction control will show signs of locking with the RF stage, in that smooth reaction will be dependent on the correct adjustment of regeneration in the RF stage.

Again, in the case of receivers incorporating ganged tuning of RF and detector circuits, it will be found essential to put a

Improving Receiver Performance—

small trimmer in parallel with the tuning condenser in order to get accurate tracking on the high frequencies. As is well known (and for the reasons here explained), a "straight" RF stage is seldom sharply tuned below about 20 metres, and, since regeneration improves this very noticeably, it becomes necessary to take full advantage of the fact by tuning as closely as possible on the RF side.

From the above, it also follows that inter-stage screening should be as effective as possible, and it is advisable to have RF and detector stages in separate screening boxes. Even without a sharply tuned RF stage this will usually increase signal strength to such an extent as to make the extra constructional work involved well worth while. With a regenerative RF stage such screening is practically essential.

Summing up, it can be said that for the experimenter, who is making his first acquaintance with RF regeneration, the stage should be fully screened, with a separate tuning control—to obviate possible complications in connection with

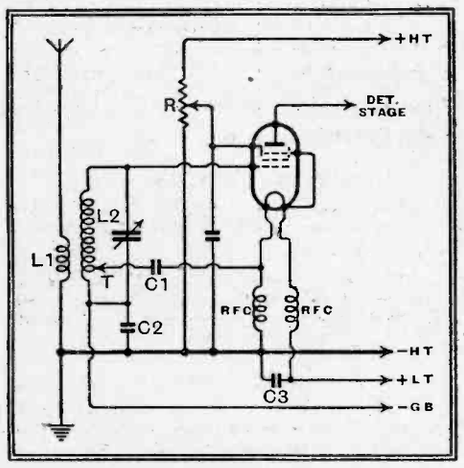

Fig. 2.—RF regeneration circuit using screened battery pentode. C1, C3, 0.001 mfd.; C2, 0.006 mfd. R, 50,000-ohm potentiometer. The filament chokes can have 50 turns, double wound on ½in. diam. former L1, L2 and all other values as usual.

trimming—and using an RF pentode valve, preferably mains. The coupling to the detector should be by means of a loose-coupled primary winding (the usual primary, grid and reaction coils are quite satisfactory), while the aerial must be loose-coupled to the input grid circuit. With a given aerial some useful and interesting work can be done as regards the spacing and number of turns on the primary winding, the idea being to get the greatest possible signal strength with minimum damping; the effects which will be found in this connection are inability to make the RF stage oscillate at all when the aerial coupling is too tight, and "ploppy" regeneration if it is too loose. The correct loading and adjustment are when regeneration is absolutely smooth.

There is no doubt that the refinement of RF regeneration, on both straight and superhet. receivers (to which it is equally applicable), will be a commonplace before very long, and it is equally certain that, once having used it on a S/W receiver, there will be no going back to the old untuned or "straight" RF stage. It has such a marked improvement on performance on wavelengths below 100 metres—the actual frequency at which regeneration begins to prove of value depends on the type of valve used and the inherent losses in the receiver—that it can safely be said that those who "do it now" are only anticipating the trend in short-wave design.

The Future of Big Screen Television

By L. MARSLAND GANDER

IS there a future for big screen television? To pose such a question when thousands of pounds have been spent on research and when the best brains of the industry have been applied for years to the problem seems belated.

When, moreover, two recent demonstrations of big screen television have shown the thing to be more than half-accomplished, the inquiry becomes almost an impertinence.

Yet there are many indications that the future is not so crystal clear as the obvious objectives of the television industry would suggest, and in fact can only be seen as in a glass darkly. I begin with the statement distributed to the Press by the Gaumont-British Picture Corporation that the Corporation proposed to install television apparatus in fifteen London cinemas. This followed a private demonstration, at which I was present, of reception of the B.B.C. television programmes on a screen measuring 8 feet by 6 at a Bromley cinema.

It was a fair presumption that the Gaumont Corporation intended to reproduce to its audiences, as a "stunt," B.B.C. programmes transmitted from Alexandra Palace.

There followed a series of questions put to the Postmaster-General in the House of Commons by various M.P.'s, which on the whole did nothing to clarify the situation. M.P.'s asked whether, in view of the B.B.C. monopoly, the Government would introduce legislation to regulate the position; whether in remodelling any television estimates of the B.B.C. he would take into account revenue derivable from the display of programmes on screens in cinemas.

Problems of Licence

Major Tryon replied that he had not been consulted about any proposals to equip theatres. But he admitted that any such proposal would raise novel problems, including those arising from the fact that possession of a wireless receiving licence does not override the ordinary conditions of copyright.

Now what are these "novel problems" which are causing so much hesitation and confusion? The facts are that before any cinema could legally reproduce the B.B.C. programmes to a paying cinema audience the proprietors would have to consult the interests of three parties, namely:

(1) The B.B.C.
(2) The copyright owners (e.g., authors, playwrights and composers).
(3) The artists.

As regards Party No. 1—the B.B.C. At this stage of development the B.B.C. is no doubt more anxious to popularise television and to encourage sales than to insist upon its rights. At any rate, I will concede that this particular point is capable of settlement.

I then come to Party No. 2, the copyright holders. Immediately the proposition begins to look more formidable. It might be asked: Why should not the B.B.C. make the necessary arrangements with the various copyright holders and charge the cinemas accordingly? The answer is that it would be necessary to set up a vast new department at Broadcasting House, adding at one stroke a task of enormous complexity to the many undertaken by the B.B.C.

When an author settles with the B.B.C. he is dealing with a single unit, but if he had to take into consideration the fact that cinemas here, there and everywhere were using the product of his brain his terms would naturally be different.

There is the further complication that a cinema in Leicester Square would be expected to pay more than a second-rate house in a suburb. The B.B.C. would, in fact, be assuming a widespread and almost indefinable responsibility on behalf of a variety of private outside interests.

The Performing Right Society only touches the fringe of the problem. It is concerned with what I will translate as "little" rights in the matter of music. The "grand" rights of the composer are vested generally in the individual. Yet the P.R.S. is a big organisation occupying two buildings near Broadcasting House and employing 270 persons.

To be venturesome in a legal morass I will define "little" rights as those relating to every separate piece of music in, say, an operetta. The rights in the whole operetta would be the "grand" rights.

The Future of Big Screen Television—

Then as to Party No. 3, the artist. Supposing the owners of a chain of cinemas decided that instead of the usual stage show each house would relay the B.B.C. television programme on to the screen. Each artist would know that in addition to appearing on the screens of home viewers his performance would also be seen at 500 cinemas. Would he agree to this for no extra fee?

The answer is obvious. Artists' fees might sky-rocket; there would be great difficulty in assessing the value of the performance. Rather than see the destruction of their own livelihoods the artists might in a body refuse to be televised.

Yet in spite of all this, progress must go on. The big screen must in the course of evolution reach perfection. What, then, is the way out of this maze of difficulty?

One of the M.P. questioners suggested a new Act of Parliament. Presumably he envisaged the issue of a compulsory licence to cinemas to permit the showing of televised programmes, the copyright holders being paid out of some central fund. I am told that there is no precedent in English law for such action, for a parallel to which we must look to the Totalitarian States.

Whether such legislation would be carried through our democratic Parliament may be open to some question.

There is also the possibility that the cinema groups might clear the copyrights through their own copyright department, though with what satisfaction they would do that in connection with programmes entirely arranged by the B.B.C. is problematical.

I feel that the whole question needs such careful and close examination that it would be premature at this point to express any final opinion. Reference of the subject to the Television Advisory Committee, which might seek legal guidance would seem the desirable course.

I had almost omitted to mention the matter of televised films, partly because I do not regard the film transmission as pure television but chiefly because the film companies are extremely unlikely to permit any form of rediffusion.

In Next Week's Issue

Automatic Gain Control Unit

THE AVC PRINCIPLE APPLIED TO MICROPHONE AMPLIFICATION

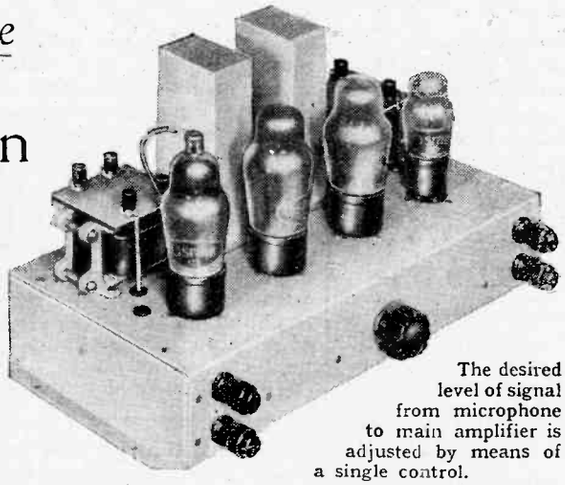

The desired level of signal from microphone to main amplifier is adjusted by means of a single control.

THE particular function of this unit is to maintain a virtually constant input to the main amplifier irrespective of the sound intensity in the vicinity of the microphone. It can be adjusted to give the same output whether the speaker is standing very close to the microphone or is several feet away, and this feature is a valuable asset in preventing serious overloading should very loud sounds be suddenly impressed on the microphone.

LIST OF PARTS

1 Intervalve coupling, ratio 1:1 — **Haynes Radio CP1**

1 Microphone transformer, ratio 10:1 — **Haynes Radio TM5**

Condensers:

- 1 0.1 mfd., 1,500 volts working, oil-immersed — **Dubilier 950**
- 1 0.02 mfd., 350 volts, mica — **Dubilier 680**
- 1 2 mfds., 200 volts — **T.C.C. 50**
- 1 25 mfds., 25 volts, electrolytic — **T.C.C. "FT"**
- 2 8-8 mfds., 570 volts working, electrolytic, case isolated — **Dubilier 3209**
- 2 0.1 mfd., 350 volts, tubular — **Polar-N.S.F.**

Resistances:

- 1 350 ohms, ½ watt — **Dubilier F½**
- 2 700 ohms, ½ watt — **Dubilier F½**
- 1 3,000 ohms, ½ watt — **Dubilier F½**
- 1 25,000 ohms, ½ watt — **Dubilier F½**
- 2 50,000 ohms, ½ watt — **Dubilier F½**
- 2 500,000 ohms, ½ watt — **Dubilier F½**
- 1 1 megohm, ½ watt — **Dubilier F½**
- 1 25,000 ohms, 1 watt — **Dubilier F1**
- 2 3,000 ohms, strip type — **Colvern**
- 1 4,000 ohms, strip type — **Colvern**

1 Volume control, 0.25 megohm — **Dubilier "B"**

3 Valve holders, 5-pin (without terminals) — **Clix Chassis Mounting Standard Type V1**

1 Valve holder, 7-pin (without terminals) — **Clix Chassis Mounting Standard Type V2**

4 Terminals, ebonite shrouded, Mic (2), Output +, Output − — **Belling-Lee "B"**

4 Terminals, HT+, HT−, Heater (2) — **Belling-Lee "F"**

1 Plug-top valve connector — **Belling-Lee 1175**

1 Resistance group board — **Haynes Radio**

Chassis: 13×6×2¼in. — **B.T.S.**

Miscellaneous: — **Peto-Scott**

3 lengths systoflex, small quantity No. 18 tinned copper wire, 7 rubber grommets, etc.

Screws: 42 ¼in. 6BA; 10 ½in. 6BA, all with nuts and washers.

Valves:

2 MH4, 1 D41, 1 W42 — **Osram**

Television Programmes

THURSDAY, JANUARY 20th.

3, Nancy Logan in songs. **3.10**, The Fastest Game on Earth: Ice Hockey. **3.25**, British Movietonews. **3.35**, Jack Hylton and his Band.

9, Music Makers: Pamela Norris. **9.5**, Repetition of 3.10 programme. **9.20**, Boulestin and Middleton Again. **9.30**, Gaumont-British News. **9.40**, Comic Strip III, American comedy.

FRIDAY, JANUARY 21st.

3, Jackie Billings and Diana Chase in dances. **3.10**, "The Duchess of Malfi": a grotesque play. **3.45**, Gaumont-British News. **3.55**, Preview.

9, "The Eve of St. Agnes": a Pepler masque. **9.30**, British Movietonews. **9.40**, Surrealist Art interpretations. **9.55**, Preview.

SATURDAY, JANUARY 22nd.

3, Puppets. **3.10**, Nat Gonella and his Georgians. **3.20**, British Movietonews. **3.30**, Comedy Cabaret, including Arthur Prince, the Music Hall Boys and the Nesbitt Brothers.

9, Cabaret Cartoons XII. **9.30**, Gaumont-British News. **9.40**, Demonstration of Table Tennis. **9.50**, Rawicz and Landauer at two pianos.

MONDAY, JANUARY 24th.

3-4, "Tristan und Isolde": Act II of the opera presented with a visual cast to mime the action and an oral cast to sing the words translated into English by F. Jameson. The B.B.C. Television Orchestra specially augmented for the occasion, and the production by Dallas Bower

9-10, Repetition of 3 p.m. programme.

TUESDAY, JANUARY 25th.

3, Ernie Dillon in "Matress Time." **3.5**, Fashion Forecast. **3.20**, Gaumont-British News. **3.30**, "Old Kentucky."

9, Speaking Personally—IX. **9.10**, Fashion Forecast. **9.20**, British Movietonews. **9.30**, "Victorian Nights Entertainment"—a charade without a solution, by Tyrone Guthrie.

WEDNESDAY, JANUARY 26th.

3, Starlight. **3.10**, "Craftsmen at Work"—1 The Art of Tattooing, compèred by S. P. B. Mais. **3.20**, British Movietonews. **3.30**, Dance Band.

9, Ivy St Helier in "L'Absinthe." **9.10**, Talk. **9.20**, Gaumont-British News. **9.30**, Cabaret, including A. C. Astor, Billie Baker and Les Trois Matas.

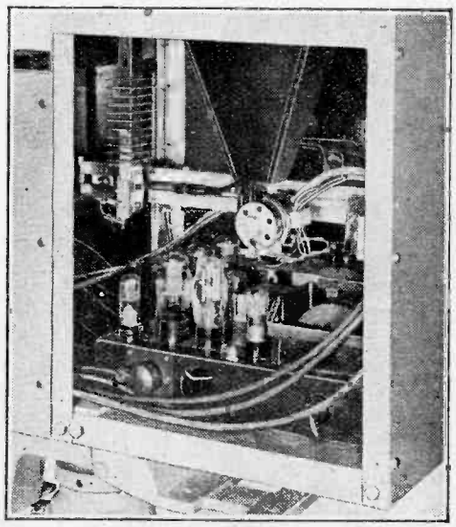

LARGE SCREEN TELEVISION. The interior of a mechanical television projector made by Scophony, Ltd. to reproduce a picture about 6ft. by 5ft. for use in large halls.

NEWS OF

UNDER-WATER BROADCAST

Sensations of a Novice Diver to be Described

JOHN SNAGGE, of the B.B.C.'s Outside Broadcast Department, has decided to be the "victim" in an exciting Regional O.B. on February 17th, when he is lowered in a diving suit into an experimental tank to describe the sensations of a novice under these awkward conditions.

A small microphone will be incorporated in the helmet, and John Snagge will wear headphones; he will thus be able to receive instructions from above and also talk to the control desk as well as to listeners all over Britain.

Among the jobs he will attempt under water will be the unscrewing of a bolt and sawing a piece of wood. Michael Standing, also of the O.B. Department, will be watching from outside the tank and will take a share in the broadcast. The transmission will end with the all-clear signal indicating that Mr. Snagge has safely broken the surface.

NEWS BULLETINS AND TIME SIGNALS

OWING to the recent revision in the times of news bulletins, it may be of interest to note the arrangements at present prevailing:—

First News ...	6.0 p.m.	(Nat.)	Mon.-Sat.
Second News	7.0 ,,	(Reg.)	Mon.-Fri.
Third News ...	9.0 ,,	(Nat.)	Mon.-Sat.
News Summary	10.0 ,,	(Reg.)	Mon.-Sat.
Late Summary	11.50 ,,	(Reg.)	Mon.-Sat. also Nat. on Saturdays.
Sunday News	8.50 p.m.	(Nat. and Reg.).	

Surprisingly few regular listeners know at what hour of the day they can expect to hear the Greenwich time signal. The appended list does not include the relays of Big Ben:—

10.30 a.m.	(Nat. and Reg.)	Daily.	
2.0 p.m.	(Nat.)	Mon. to Sat.	
4.0 ,,	(Nat. and Reg.)	Sundays only.	
6.0 ,,	(Nat.)	Mon. to Sat.	
7.0 ,,	(Reg.)	Mon. to Fri.	
9.0 ,,	(Nat.)	Daily, also Reg. on Sun.	
10.0 ,,	(Reg.)	Mon. to Sat.	
11.0 ,,	(Nat.)	Sundays only.	
11.30 ,,	(Nat. and Reg.)	Mon. to Sat.	

CANADA'S NEW STATIONS

TWO of the five new high-powered transmitting stations, planned by the Canadian Broadcasting Corporation, were opened during December at Montreal and Toronto. The two transmitters, rated at 50 kW each, are identical, and are the most powerful in the Dominion. Montreal's call sign is CBF (910 kc/s) and that of Toronto CBL (840 kc/s). This is the first step in an ambitious plan, first put forward by the Royal Commission Enquiry of 1929, to cover the Dominion with high-powered broadcasting stations. Both transmitters use the vertical type aerial, the masts of which rise to 647 feet above the ground.

Three more transmitters will be built during the next two years, one for the Atlantic coast provinces, another for the prairies, and a third for the Pacific coast region. A sixth, for use on the short waves, is also contemplated.

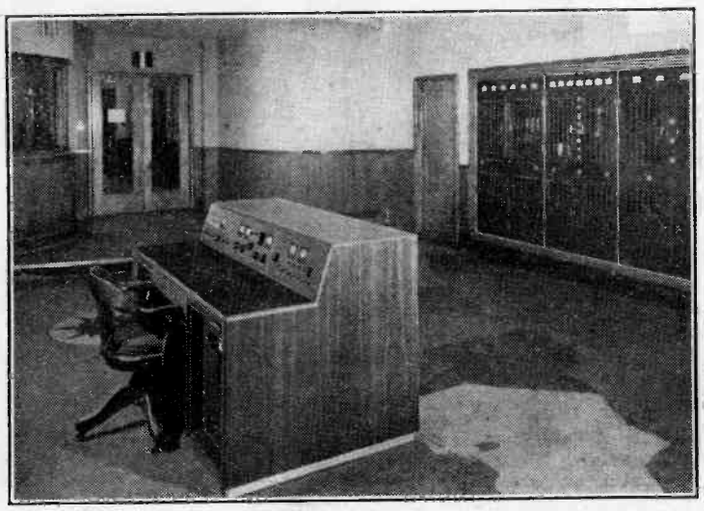

A MAP of Canada covers the floor of the main operating room of each of Canada's new 50-kW stations CBF and CBL. That of CBF, with the control desk in the centre, is shown above.

B.B.C. APOLOGIES

Are They Too Frequent?

IS the B.B.C. too apologetic in the matter of breakdowns? A Ceylon listener thinks so, and the Corporation may take his words to heart. "Listening to the B.B.C. programmes," he writes, "I have been struck by the number of times the announcer apologises for a breakdown. Most of them are of a momentary nature, and the effect of the apology is to draw attention to a hitch which has passed unnoticed. The B.B.C. would do better to make a weekly 'carte blanche' apology for all their breakdowns."

There are two sides to this question. Many distant listeners are perturbed by even a minor stoppage in transmission, and a brief acknowledgment of a hitch may save many a search for a possible loose connection or defective aerial or earth lead.

DAVENTRY'S POWER

A Plea from the West

A READER writing from California reports that at 5 o'clock, local time, on Christmas Day he listened to the King's message to the Empire rebroadcast from Daventry at 1.10 a.m. GMT on December 26th.

He states that just before the record of the King's message was switched on reception was *as bad as usual*, but at the critical moment the strength was increased about fourfold, and every word of His Majesty came through perfectly. Our correspondent suggests that if this can be done for a special occasion, why cannot the transmissions always be of this power. In California, he states, reception of English stations compares most unfavourably with that of Germany, Italy and Japan.

NORTH IRELAND'S NEW B.H.

JUST as Lisnagarvey set a new standard in B.B.C. station design, so a new Broadcasting House to be erected in the heart of Belfast will, internally, be the last word in ultra-modernity. One large orchestral studio and a battery of smaller ones for drama and talks will, in 1939, give Northern Ireland new and better facilities for original programmes, thus lessening its dependence on cabled entertainment from London.

RADIO JOURNALIST : LABOUR CANDIDATE

GARRY ALLIGHAN, best known as a radio journalist, has been adopted Parliamentary candidate for Gravesend in the Labour interests. He joined the Labour Party nearly twenty years ago and was last year co-opted to the L.C.C., serving on the main Hospitals and Medical Services Committee.

He has recently written a biography of Sir John Reith, which will be published this month.

BELGIUM'S TINY STATIONS

Commercial Transmitters of 125 Watts!

MANY people believe that the romance and enthusiasm of the early days of broadcasting have gone for ever. Yet in Belgium there are still broadcasting stations where the owner is chief engineer, announcer, and station director in one, and where the unseen audience feels that they are being entertained by a friend and not educated by an august and anonymous body.

Belgium's tiny stations are allowed a power of 125 watts,

and must operate on common wavelengths around 200 metres. As wavelengths are scarce, they have to divide time between them. These stations have nothing to do with the official broadcasting institute, and they derive their revenue entirely from publicity. Their importance is purely local, but is much greater there than one would imagine from the low power employed.

That big industrial city, Liège, midway between Brussels and the German frontier,

THE WEEK

has no fewer than four "tiny" stations. One of these, Radio-Seraing, located about 8 miles from Liège, is typically that of a pioneer enthusiast. With the advent of radio the present owner, M. Henrion, started

ERAING, one of Belgium's tiny stations rates on 200 and 203.5 metres at 100 watts, in this imposing villa. The owner's Mlle. L. Henrion, is the station announcer

broadcasting. He built his own transmitter and asked his friends to listen in. Every now and then he would ring them up and ask for reports. Later his practice of playing fans favourite tunes developed into "intentions," private messages of congratulation paid for by friends.

M. Henrion built a large house on the top of a hill far above Seraing and made his home and his station there. With the commercialisation of the station an office was opened and a young permanent engineer engaged to tend the transmitter, but M. Henrion is still D.G.

Belgium's tiny stations are only tolerated by the Government, and it is a curious fact that their publicity activities are liable to immediate cessation if the full wording of the law were applied.

ARAB NEWS BULLETINS

ALLEGATIONS that the B.B.C. is making an exception in the case of the Arab broadcasts by declining to divulge the contents of the news bulletins are based on a misunderstanding. Under the terms of its copyright agreement with the news agencies, the Corporation is not at liberty to communicate the contents of any news bulletins except through the medium of broadcasting, and the rule applies whether the news is for home or overseas consumption.

R.S.G.B. AND 5-METRE WORK

AT the recent Annual General Meeting of the Radio Society of Great Britain, the secretary, Mr. John Clarricoats, was presented with an amateur short-wave communications receiver in recognition of his work for the Society. Amateurs from all over the world subscribed to this token of appreciation.

The accounts presented at the meeting showed that the R.S.G.B. is financially in quite a healthy condition. One item, of £15, in the balance sheet is particularly significant, for it represents the cost of a special report on five-metre working. This was drawn up not only for the benefit of the Society's members, but for Government perusal. It gives a comprehensive summary of technical developments on this ultra-short wavelength, where amateurs have done so much pioneer work.

I.E.E. MEETINGS

WE give below a summary of the meetings of the Wireless Section of the I.E.E., which will be held during the next few months at 6 p.m. at Savoy Place, London, W.C.2:—

February 2nd.—Professor C. L. Fortescue, O.B.E., M.A., and G. Mole, Ph.D., B.Sc. "A Resonance Bridge for Use at Frequencies up to 10 Megacycles per Second."

March 2nd.—P. P. Eckersley. "A Quantitative Study of Asymmetric Sideband Broadcasting."

April 6th.—A. J. Gill, B.Sc. (Eng.), and S. Whitehead, M.A., Ph.D. "Electrical Interference with Radio Reception."

May 4th.—Dr. Ralph Brown. Lecture on "Researches in Radio Telephony."

Among the forthcoming Ordinary Meetings of the Institution there is one of particular interest to *Wireless World* readers. On April 21st two papers on television will be read, the titles being "The London Television Service," by T. C. Macnamara and D. C. Birkenshaw, M.A., and "The Marconi-E.M.I. Television System," by A. D. Blumlein, C. O. Browne, N. E. Davis, and E. Green, M.Sc.

Expansion of German Television-Telephone Service

IT is announced that the German Post Office will open the television-telephone service between Berlin, Leipzig, Nürnberg and Munich within the next month or two.

THE TRAINING GROUND of London's busmen provided the material for an excellent O.B. for viewers last week. In spite of the inclement weather the picture received was excellent.

"VOICES OFF"

TELEVISION'S biggest studio experiment occurs on Monday next with the transmission, both afternoon and evening, of Act 2 of Wagner's "Tristan and Isolde." Dallas Bower, the producer, is employing a double cast—one to mime the action and the other to sing—with the object of overcoming the main defect of stage opera, viz., the difficulty of combining good acting with good singing.

Singers and orchestra will perform in Studio 2, while the acting is done in Studio 1. Only Hyam Greenbaum, conducting the augmented Television Orchestra, will be able to see, by means of a monitor receiver, what is happening in the other studio, and the actors there will take their cues from a "talk back" speaker.

The experiment will make possible some interesting innovations in operatic scenery. Whereas in the stage versions the action is confined to the front of a castle, in the television version the actors will be able to move freely through a "forest" built round the walls of Studio 1. The cameras will "pan" round from a central position.

VATICAN SW STATION

Variations of Power and Wavelength

THE Pope's new 50-kW universal short-wave station, which was opened on Christmas Day with a special concert from the Vatican, can work on any wavelength between 15 and 60 metres. It has directional aerials for South, Central and North America and East and South Asia, as well as an omni-directional aerial which is mounted on one of the four 210-foot masts supporting the beam aerials.

The transmitter's power varies according to the type of transmission; for telegraphy 50 kW, for CW telegraphy 25-32 kW, according to the wavelength used, and for telephony 15-24 kW depending on the depth of modulation.

To facilitate a quick change from one wavelength to another the transmitter is equipped with two sets of tuning coils, etc., so

"GOOD LOOKS" was the ideal aimed at in the development of a new housing estate by the Town Council of Southwold, Suffolk. In an effort to further this project they even erected indoor wireless aerials but the electric supply company decided, in spite of vigorous protests from the Rural District Council and the Area Planning Committee, to erect poles to carry overhead cables.

News of the Week—

that the one which is not in use can be tuned in readiness for the next transmission.

BERLIN TELEVISION STUDIO

THE Berlin television studio has been moved into the same building as the studios of the short-wave station, Zeesen. Transmission on 180 lines will continue until Easter at least, and the new studio is therefore only temporary.

Light-spot scanning is still used, and the studio itself where actors have to work in semi-darkness has a sloping stage.

An ante-room is provided where the artistes can accustom themselves to the darkness. Whereas the studios at Alexandra Palace are flooded with light, Berlin television artistes are still in the semi-darkness of the spot-light scanner. A separate studio is employed for the musicians providing the accompaniment, the artistes hearing the music through the partition.

FROM ALL QUARTERS

An Arctic Link

THE first radio telegraphic link between the United States and Iceland has been inaugurated by the R.C.A.

R.C.A. Institutes

THE general fifteen months' wireless course, which is part of the R.C.A.'s instruction scheme, is to be extended by three months next March. At the same time a two-year term in television will be added.

Wireless Nuisances

PEOPLE in Bristol who cause unreasonable disturbance with noisy loud speakers or gramophones are liable to prosecution under a new by-law adopted by the City Council.

Radio Relays

IT is claimed that on the Gold Coast seventeen radio relay stations are in operation, each of them relaying Empire transmissions to many thousands of listeners.

New Short-wave Station

THE Swiss Post Office has decided to build a short-wave station, which should be completed by the end of the year. A 20-kW transmitter is to be erected near Berne.

Geneva Broadcasting House

AFTER great difficulties, Geneva has succeeded in financing the project of a broadcasting house of its own. The first spadework has already started, and the building is to provide for six studios.

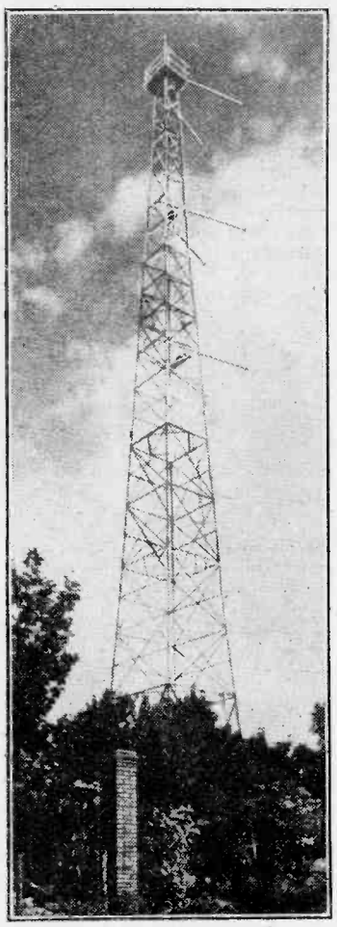

THE FIRST ultra short-wave broadcasting station is now working daily at Monte Mario, Italy, between 6 p.m. and 9.30. p.m. on 6.9 metres with a power of 2 kW; the aerial, shown here, can be adapted for experimental television transmissions.

New Polish Transmitter

S.P.D. is the call-sign of the new Polish short-wave transmitter, which is working on 26 metres with a power of 2 kW.

Esperanto

TALKS in Esperanto are given every Saturday at 1.45 p.m. from Lille (247 metres) and at 6.10 p.m. from Rome (420 metres), which also sends out news every Monday at approximately 9 o'clock.

Short Waves from Singapore

SINGAPORE may be heard by British short-wave listeners in March, when the British Malaya Broadcasting Corporation opens up with two transmitters, ZHP and ZHO, on 31.48 and 49.9 metres respectively. The former will work on Saturdays and Sundays and the latter on weekdays.

Television in India

ACCORDING to our Indian correspondent, all details for the television service from Bombay will soon be completed, and it is hoped that the transmitter will be working by April.

German Pirate Transmitters

A LAW has just been passed in Germany imposing the penalty of *solitary confinement* on convicted operators of unlicensed amateur transmitters.

Television in California

IT is officially announced that the Don Lee network of California is to commence a scheme whereby its normal sound transmissions are simultaneously radiated each evening from the television station W6XAL.

R.E. Wireless Reunion

THE annual reunion dinner of the Royal Engineers Wireless Signals (1914-1919) Association will be held at the White Horse Hotel, Birmingham, on Saturday, February 19th. Hon. Sec.: Mr. C. R. Johnson, 288, St. Paul's Road, Smethwick, Staffordshire.

Kalundborg's Power

IN the article on "Signal Strengths" in our issue of December 30th the author expressed doubt as to whether the Kalundborg broadcasting station increases its power in the evening. We have been informed by the Danish Administration of Post and Telegraphs that the station always works at its full power, that is, 60 kW (unmodulated carrier).

Coffee Propaganda Station

THE Brazilian National Coffee Department have ordered a 50-kW transmitter to be erected in the neighbourhood of Rio de Janeiro or Bahia. This station, operating on medium and short waves, will include a certain percentage of coffee propaganda in its programmes, which will be directed to Europe and N. America.

New York Television

CO-OPERATING with the American Radio Relay League, the R.C.A. recently held an exhibition at Radio City, and reception of the 441-line television transmissions from the Empire State Building, a mile away, was demonstrated on fourteen receivers. In this way New York was given its first taste of practical television. It is reported that the R.C.A. is to enlist the assistance of amateurs in taking field strength measurements on experimental transmissions.

Wavelength Change

THE Norwegian 10-kW transmitter Stavanger, which has operated on the common wavelength of 352.9 metres (850 kc/s), is reported to have changed to 360.6 metres (832 kc/s) because of the opening of the new 100-kW transmitter Sofia, operating on the former wavelength.

Relaying Daventry in India

OWNERS of medium-wave sets in Delhi are now able to enjoy the short-wave programmes from Daventry. The B.B.C. transmissions are picked up at the Todapur receiving centre, six miles from New Delhi, and relayed on a higher wavelength.

Engineers at Todapur are carrying out a twelve-month series of signal strength measurements on the Daventry transmissions.

Spelling Bee Beamed

OXFORD UNIVERSITY will compete with Harvard and Radcliffe Universities in a Transatlantic Spelling Bee Contest which will be relayed on the Regional wavelength between 5 and 5.45 p.m. on Sunday, January 30th. The beam system will agitate to words taken from history, law, tennis, psychology and many other recondite subjects. Thomas Woodroffe will be English master of ceremonies and his opposite number in America will be Paul Wing.

Licence Figures

APPROXIMATELY 8,479,600 wireless receiving licences were in force at the end of December, 1937, which is an increase of 522,879 during the year. The year's increase, however, compared with that of 1936, shows a decline of over 57,000.

New Zealand claims to be second in the British Empire and fourth in the world for the number of licences per head of population. At the end of September licences numbered 271,683, an increase of 50,000 over the corresponding figure for 1936.

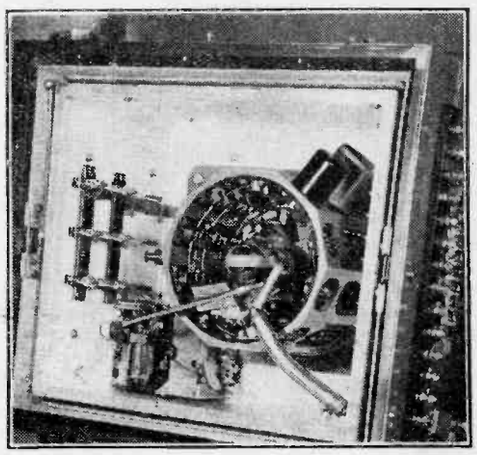

VATICAN CITY'S short-wave station is designed for operation on ten different wavelengths all of which are crystal controlled. The crystals, mounted around a cylinder, are enclosed in a thermostatically controlled case.

Readers' Problems

A Selection of Queries dealt with by the Information Bureau, and chosen for their more general interest, is published.

Amplifying Tuning Indicator

ONE of the weaknesses of most tuning indicators is that they fail to show small increases in signal strength. Alternatively, a device which indicates such small changes is overloaded on a strong signal.

So far as the first disability is concerned, at any rate, the difficulty is overcome by using a valve-amplifying arrangement, and this is what a correspondent proposes to do as an aid to some experimental work in which small changes are to be observed. He proposes to make a single-valve amplifier (with dry-battery LT, as it will be used intermittently) and to connect it in the anode circuit of the IF valve, which is controlled by the AVC system. The object of his letter is to enquire how to connect the amplifier in such a way that the indicating milliammeter will register an increased reading with increase of signal strength.

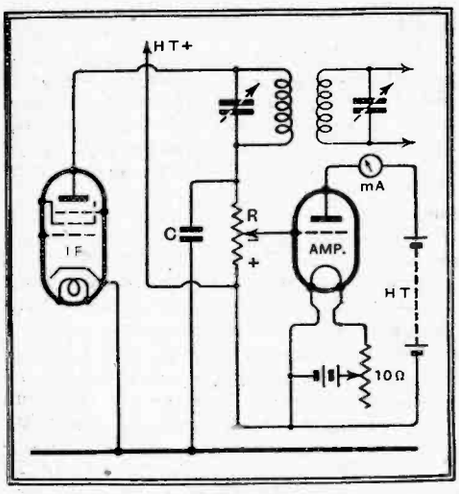

Fig. 1.—Sensitive tuning indicator, showing connection to the IF amplifier of a receiver. C represents the normal decoupling condenser, while the potentiometer R replaces the original decoupling resistance.

The grid and filament of the valve should be joined across a resistance in the valve anode circuit in the manner shown in Fig. 1. The polarity will then be as shown by positive and negative signs on the diagram, and in the absence of a signal the grid will take up a negative voltage, depending on the IF anode current. On the incidence of a signal the anode current of the IF valve will be reduced by AVC. In consequence, the voltage across R will be reduced and the "meter" valve grid will become less negative than before; its anode current will increase and the meter will register higher.

Easily Cured Hum

MODULATION hum, which is "given a ride" through the RF and IF circuits of a receiver on the back of any signal that may be passing through them, is easily detected—and, in most cases, as easily cured.

A reader whose set suffers from hum only when it is tuned to a carrier wave gives us a good example of this trouble. It is sometimes due to allowing mains leads to run in close proximity to radio- or intermediate-frequency circuits, in which case the remedy is obvious. More often, the interference enters by way of the mains transformer, and nowadays a metal screen between primary and secondary is generally interposed as a barrier. In the absence of such a screen, the simple expedient of connecting a condenser of 0.001 mfd. between one of the mains leads and earth is usually effective. The condenser should be rated for working at full supply voltage, and a connection to each mains lead should be tried.

Interpreting Meter Readings

BY keeping a record of the anode voltages and currents of the various valves in a receiver it is possible to observe at once any change in operating conditions; but it is not always easy to interpret the readings of the meter. For instance, when the emission of an output valve has fallen its anode voltage is usually abnormally high, although its anode current is reduced. A correspondent who has observed these changes may be right in concluding that the valve is becoming due for replacement, but we think he is wrong in assuming that the existence of high voltages and low currents in the remaining valves throughout the set is normal. On the contrary, if the output valve had lost emission and all the other valves were normal, we should expect to see, so far as they were concerned, a rise both in current and voltage, due to the reduced load on the power-supply equipment.

The state of affairs which our querist describes might be due to a general decline in emission of all valves except the rectifier or (and we think this much more probable) to low heater voltage throughout.

Using a Multi-range Test Set

ANOTHER querist, writing on the subject of voltage and current measurements, poses a long list of questions on the use of an "Avometer" multi-range test meter that he has just acquired. A comprehensive treatment of the many problems raised would be rather beyond the scope of the Information Department, and our best plan is to remind this reader that the makers of his instrument issue a useful half-crown book entitled *Radio Servicing Simplified*. Although written in general terms for the benefit of both amateurs and professionals, this book is specially adapted to the needs of users of "Avo" instruments. All the routine tests about which our correspondent asks are discussed in detail, and a logical sequence of tests is described.

Motor Lorry Interference

"WHY is it," writes the owner of a car radio receiver, "that heavy motor lorries radiate heavier interference than the most powerful private cars?"

We take it that this query refers to petrol lorries and not to diesel-engined vehicles, which presumably do not radiate interference. Even so, we doubt whether it would be generally agreed that our reader's statement is right, although we have certainly observed that most heavy old-fashioned lorries seem to be bad offenders in this respect. We have always thought this to be due to the fact that the vehicles, being bigger and particularly higher than the average private car, act as better aerials; also that the wiring of the ignition system is more spread-out and so likely to act as a better radiator. Further, it would seem that these lorries often have magneto ignition of a type that may be inherently a worse radiator than the coil system of the average private car.

Possibly a reader with specialised knowledge on this subject can supply a better answer.

A Real Radio-Gramophone

QUITE a number of AC/DC sets are not provided with pick-up terminals, and it is not always an entirely simple matter to modify them for reproduction of gramophone records. A querist who has a set of this description has, therefore, decided to use the pick-up for modulating an external oscillator valve which will be coupled to the aerial circuit of the set; in fact, the oscillator will be acting as a miniature transmitter.

Our correspondent proposes to use, as a temporary expedient, at any rate, a battery-operated oscillator with a few volts of HT, and asks for a circuit diagram of a combined oscillator-modulator for which he could use up parts of a discarded battery set.

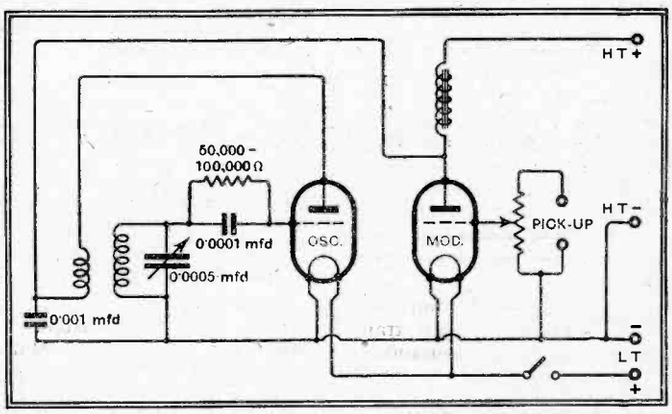

Fig. 2.—Gramophone reproduction without any direct connection between pick-up and receiver; an oscillator-modulator circuit that can easily be improvised from the components of a disused battery set.

We suggest the circuit shown in Fig. 2, as the few simple parts required are almost certain to be found in any old receiver. With regard to the modulation choke, this may consist of the primary of a disused AF transformer. If this modulated oscillator is to serve as anything but a temporary expedient, negative bias should be applied to the modulator grid, the HT voltage being raised to a reasonable value.

Random Radiations

By "DIALLIST"

Getting Into Their Stride

THE television programmes do seem to be getting into their stride now. One or two really well-done plays have been televised recently, and some of them have achieved the honour of serious criticism in the leading national newspapers. There seems to be every chance that owners of televisors will be able to look-in at the Boat Race and many other big events this year. Some have predicted that during the next few months we shall see a real boom in television, with receivers selling like hot cakes. I hope very much that we shall, for this new department of radio needs and deserves all the encouragement that it can get. Pessimists argue that the public won't buy televisors until two things have happened. The first is a big all-round improvement in the programmes; well, that seems to be happening already. The second is the banishment of the fear that present-day receivers may be out of date in a short time. To clear that point up all that we need is an assurance from the Television Committee that transmissions on the same lines shall continue for, say, a further two years or, alternatively, that no change will be made during that period to which present receivers cannot be adapted easily and cheaply.

A Valve Bombshell

WRITING recently about British valves I mentioned that one of our main troubles was that we could not standardise a single technique for their design and manufacture. And now comes the news that we are to have yet another range of British valves, different from all the others and from American valves as well. By the time that both mains and battery types in the new series have made their appearance the British valve total will not be much under a thousand. The new valves, made by Mazda, are to have an Octal base, but it isn't quite the same as the American Octal base. The central spigot and the circle on which the valve pins stand are each one millimetre greater in diameter than those of American valves. The connections to the pins are also entirely different. From the technical standpoint both the new base and its arrangement of pins have certain advantages. These may prove to be so outstanding that they will win the day. I only hope that it may be so, though I can't help regretting that our already over-swollen list of valves is to become yet greater.

Worth Thinking Over

There's just one point that our valve manufacturers might do well to think over at the present time. So far as one can see, the stage is really set for the appearance this year in large numbers of those bigger sets containing from eight to fifteen or more valves for which *The Wireless World* has so long asked. Both the public and the set manufacturer have at long last realised that there are very definite limits to the performance obtainable from the receiver containing three or four valves in addition to the rectifier and that with such a combination there are now few real improvements that can be produced as year follows year. Amongst the cheaper sets the small superhet will undoubtedly continue to hold its place, but I believe that the era of bigger and better sets of the more or less luxury type is about to dawn. There's only one thing that may hold up this much-to-be-desired development. That is the fear that besets the man-in-the-street that valve renewals may be pretty expensive in a big set. Give us cheap valves and that fear automatically disappears. And valves cannot become really cheap unless and until we cut away the dead wood and standardise on one technique.

Everyone Would Benefit

Honestly, I believe that if our valve industry made two bold moves it would do more to benefit everyone concerned than anything that has happened in wireless during the last ten years. The first move I suggest is to adopt the American type of Octal-base valve as the standard and to go all out for its production. The second, still bolder, perhaps, is to price *all* British battery valves at five shilling and *all* British mains valves at seven and six. Were these things done, here's what would happen. Designers would cease to be forced to make every valve in their sets work all-out. They would no longer be frightened of introducing such refinements as the beat oscillator. Beat oscillator? Simply a valve, switched off or on at will, whose oscillations are fed to the second detector. It enormously simplifies short-wave working and it is almost an essential for ultra-short-wave reception, enabling you, as it does, to detect stations by the squeal without any possibility of annoying your neighbours. Is there any British set that now has it? If there is, I don't know it, though it is a standard fitting in the better sets on the far side of the herring pond. Next, the man in the street would cease to have any fear of the possible cost of valve replacements. Whether he bought a big set or continued to use a small one he would not, as he now does, try to get the very last distorted ounce out of his existing valves. Sales of valves would increase enormously and we could meet and defy American competition.

Broadcast Programmes—FEATURES OF THE WEEK

THURSDAY, JANUARY 20th.

Nat., 8.30, "The Way of Peace": talk by H. A. Smith. 9.20, Music of Bela Bartok with the composer at the piano.

Reg., 8, Last year in the Canadian Arctic: Patrick Baird and Reynold Bray. 8.15, Concert by the London Symphony Orchestra. 9.5, Excerpt from the pantomime "Goody Two Shoes."

Abroad.

Bucharest, 7.15, Albert Coates conducting the Bucharest Philharmonic.

Radio Paris, 8.30, "Boris Godunov"—Prologue and Acts I and II.

FRIDAY, JANUARY 21st.

Nat. 6.25, Another George Formby episode. 7, "Manon," an opera by J. Massenet. 9.20, Italy: talk by Sir Charles Petrie. 9.40, Boxing in Bermondsey.

Reg., 8, Sydney Kyte and his Band. 8.40, Is that the Law? 9, "Meet the Family": a musical farce.

Abroad.

Budapest I, 6.30, "Tannhäuser," relayed from the State Opera.

Warsaw, 7, The Warsaw Philharmonic, with Uminski, pianoforte.

SATURDAY, JANUARY 22nd.

Nat., 2.45 a.m. Farr *v.* Braddock: running commentary from New York, and at 6.45 p.m. recording "As the Commentator Saw It." 9.20, "American Commentary," relayed from New York. 9.35, Ice Hockey commentary.

Reg., 6.45, British Film Music. 8.30, "Richard Savage,"—a radio play based on Gwen Jones' novel. 9.36, Egon Petri, pianoforte.

Abroad.

Berlin, 7, Studio production of "A Night in Venice" by Johann Strauss.

SUNDAY, JANUARY 23rd.

Nat., 7.15, Clifford Curzon, pianoforte. 9.35, The Worthing Municipal Orchestra.

Reg., 4.20, Talk by Sir Adrian Boult. 6, "Aunt Jenny": a radio play. 9.5, Sunday Orchestral Concert—XV.

Abroad.

Leipzig, 7, "Der Opernball"—Heuberger's opera, relayed from Dresden.

Brussels I, 8, "Tip-Toes": Gershwin's three-act operetta.

MONDAY, JANUARY 24th.

Nat., 7, "Monday at Seven." 9.20, World Affairs. 9.35, Teddy Joyce and his Band. 10.15, Constant Lambert conducts the B.B.C. Orchestra (E).

Reg., 6.30, Swift Serenade. 8, Repeat performance of "Manon."

Abroad.

Leipzig, 7, German-Italian concert.

Brussels I, 8, Concert of national music by Sixteenth-century composers.

TUESDAY, JANUARY 25th.

Nat., 7.30, "Progress"—talk by H. A. Mess. 9.20, "How I Began" by The Rt. Hon. Margaret Bondfield. 9.35, Music by La Société des Instruments à Vent de Bruxelles.

Reg., 7.50, Moiseiwitsch, pianoforte. 9, Dominion Theatre Variety. 9.30, Victor Silvester and his Orchestra.

Abroad.

Breslau, 7, Beethoven's "Fidelio" from the German Opera House, Breslau.

Brussels II, 7.15, Beethoven and Wagner Symphony Concert.

Lyons, PTT, 8.30, Conservatoire Concert, conducted by Dumaz.

WEDNESDAY, JANUARY 26th.

Nat., 7.15, Film Music—"Top Hat." 8, From Sydney: a talk by the Governor of New South Wales on the opening of Australia's 150th Anniversary Celebrations.

Reg., 6.40, "From the London Theatre." 8.15, "Band Waggon." 9, "The World Goes By."

Abroad.

Munich, 8, Youth programme, relayed by all German stations.

Strasbourg, 8.30, Rosenthal conducting a concert of French music, played by the National Orchestra with Fevrier, pianoforte.

Valve Life

IN a recent issue of *The Wireless World* there was a letter from Mr. L. J. Voss, who wondered where I had picked up the idea that a valve has done well if it has a service life of a thousand hours. I don't think I quite said that. What I did say was that a thousand hours in tip-top condition is the average life of a valve. That, I believe, is the figure to which valve manufacturers work. At any rate, I have stated scores of times in print that the average life was a thousand hours, and so far no valve manufacturer has written to contradict. Perhaps some of them will do so now!

For a good many years I used to keep a regular check on my valves, and, taking it by and large, the figure of a thousand hours wasn't very far out.

Long Lasters

One does, of course, come across quite a number of valves which keep up their good performance for surprisingly long periods. One old DER that I had was still in pretty good form after nearly 3,000 hours of use. A Dundee reader tells me of a set of American valves which were in daily use for five years; he estimates a service life of about 7,000 hours for them. I have no doubt this is a perfectly genuine case since he tells me that at the end of four years a new outfit of valves was tried, but that as no difference could be detected the old ones were replaced in the receiver. Often, though, when valves reported to be as good as new after some tremendous amount of use are put to the acid test of the laboratory bench, they turn out to be very different things from what they originally were. The modern dull-emitter hardly ever burns out, unless it suffers an accident, but there is after a time a marked falling off in the emitting power of its filament or cathode. A valve will often work in some kind of way when both the mutual conductance and the emission figures are a long way down, but it can hardly be described as being in first-rate condition.

World-wide Interference

A READER, living in America, comments strongly on the widespread interference caused by short-wave therapy and diathermy apparatus. "I have frequently," he writes, "heard as many as thirty of these infernal machines in the frequency range between about 15 and 25 megacycles." And now comes a really astonishing suggestion. Some of them, he is sure, were certainly not working in North America, since their 100-cycle note was unmistakable, and would most likely arise from a 50-cycle AC supply. The periodicity in the whole of North America is standardised at 60 cycles. Is it therefore possible that the interference noted in America came from Europe? I believe that it is possible, though, if such things do happen, it is rather an eye-opener about the ranges at which such apparatus can make itself a nuisance. There is, however, another possibility: in just a few North American districts there are 25-cycle AC supplies, and these might possibly account for the 100-cycle note.

Licence Figure Pointers

DURING November the increase in wireless receiving licences was 50,277 for Great Britain and Northern Ireland. This is a highly satisfactory figure, but if you examine the details they contain one or two pointers which seem to show that we are not so far from the saturation point as some people believe. Of course, there never will be such a thing as a saturation point unless the population of this country declines. What must happen sooner or later is that the rising curve will become less and less steep until it is almost flat. One of the pointers to which I refer is to be found in the November figures for London. Never before, so far as my memory serves me, has London shown anything but an increase. In November there was actually a decrease—only 89, it is true, which is a minute proportion of the 1,071,525 London licence holders—still, it is a decrease. There were other decreases, too, in such districts as Wisbech (346), Gravesend (124), Newcastle-on-Tyne (133) and Bradford (462). But these are more than made up for by the big increases such as Stockport's 515, Derby's 539, Plymouth's 300, Northampton's 361, Stoke-on-Trent's 455, Dewsbury's 1,118 and Sheffield's 1,151. It is very satisfactory to see that both Wales and Northern Ireland, where the number of licences is the smallest for the country, show considerable increases. Wales is up by 1,540 and Northern Ireland by 1,433.

NEW MAZDA VALVE BASE

ANOTHER valve base has been introduced by Mazda and will be used on a new series of battery and mains valves which will be released shortly. The new base is known as the British Octal and is similar to the well-known American Octal base; it is not the same, however. There are eight pins and a central keyed-spigot; the pin spacing is slightly different from the American, and the spigot is slightly larger, while the pin connections are also different.

The makers state that the reason for the adoption of the larger spigot is so that it will accommodate the exhaust tube of the valve and so make possible a smaller valve with shorter internal leads. Different base connections from the American are adopted because a policy of interposing an "earthy" pin between live ones has been adopted in order to reduce stray couplings to a minimum. For instance, a duo-diode-RF pentode has the screen-grid pin between the anode and one diode anode, and the metallising pin between the two diode anodes.

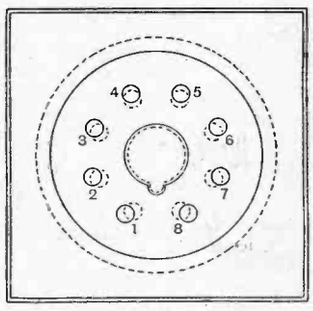

The disposition of the pins and spigot in the British Octal valve base are shown solid and those of the American type in a dotted line.

As the connections are different from the American, the base has been made different in order to prevent confusion. The differences are clearly shown in the drawing in which the British base is indicated by the solid lines and the American by the dotted.

McCARTHY

6-valve all-wave Superhet with Radio Frequency Stage

8 stages.
8 tuned circuits.
3 wavebands.

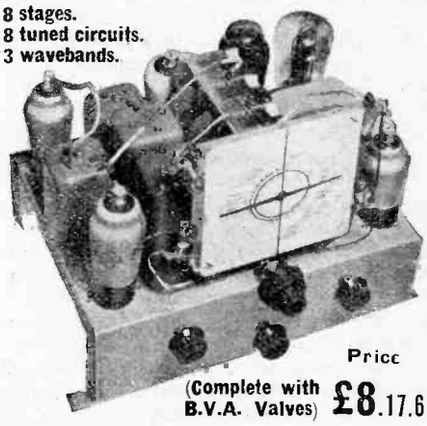

Price (Complete with B.V.A. Valves) £8.17.6

Performance (made possible by use of multi-electrode valves) equal to that of many receivers employing 8 valves or more. Brief specification includes: Large "Airplane" dial, with different coloured lights automatically switched on for each wave-range. Micro-vernier 2-speed drive. 4-point wave-change and gramophone switch. Volume control and variable tone control also operative on gramophone. Reinforced heavy-gauge steel chassis. Covers 19–2,000 metres.
Circuit comprises Preselector circuit, radio frequency amplifier (operative on all 3 wavebands), triode-hexode frequency changer, double band-pass I.F.T. coupled I.F. amplifier, double diode-triode detector and L.F. amplifier. D.A.V.C. applied to 3 preceding valves. 3-watt pentode output.

9 VALVE FOUR-WAVE SUPERHET DE LUXE

14 GNS.

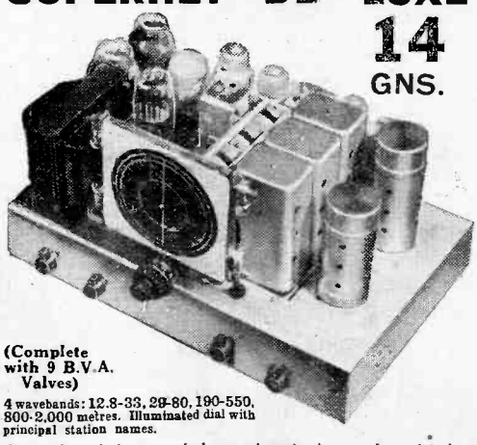

(Complete with 9 B.V.A. Valves)

4 wavebands: 12.8-33, 29-80, 190-550, 800-2,000 metres. Illuminated dial with principal station names.

Controls.—A feature of the receiver is the number of independent controls fitted, making it extremely interesting to operate. These include sensitivity control (varying bias on R/F stage), or Q.A.V.C. with manual muting control for inter-station noise suppression. 5 position wave-change and gramophone switch. Progressive variable tone contro operative on radio and gram.

Circuit in Brief.—Aerial input to pre-selector circuit, radio frequency amplifier, latest type triode-hexode frequency changer, 2 band-pass I.F.T. coupled I.F. amplifiers, double diode detector, triode L.F. amplifier, separate triode phase-changer capacity coupled to 2 large pentodes in push-pull. Heavy 16-gauge steel chassis. Finest components and workmanship throughout. Harries tetrodes in place of output pentodes if desired.

STANDARD MODEL 12 GNS. As above, but with triode push-pull output, and fewer controls fitted

DEFERRED TERMS on application or through our City Agents
LONDON RADIO SUPPLIES LTD.
11, OAT LANE, E.C.2.
Demonstrations Daily.

All McCarthy receivers supplied complete with valves, knobs, pilot lamp, leads, mains cable and plug. 12 months' guarantee. (Valves 3 months.)

Complete illustrated catalogue, with technical data and circuit diagrams, on receipt of 3d. in stamps, or abridged list of McCarthy chassis types free of charge.

McCARTHY RADIO LTD.
44a, Westbourne Grove, London, W.2
Telephone: Bayswater 3201/2

Letters to the Editor

The Editor does not hold himself responsible for the opinions of his correspondents

Television Programmes

THE recent letters on the subject of television in your pages seem to have come in equal numbers from those who have possessed receivers for six months or a year and would not be without them and those who have visited viewing rooms once or twice and tell us exactly why the public is not besieging retailers in mass waving cheques for £60 or £80.

I have had a receiver here, thirty miles from Alexandra Palace, since the programmes started, and generally get an hour's good entertainment every evening. Occasionally I am "not amused," but I realise that at that time there are probably a lot of other viewers who are.

The opinion of those who have television receivers seems to be that they would not be without them, and that ordinary broadcasting seems a very dull affair after a month or two of viewing.

With regard to screen size, I agree with Mr. Gould's remarks, in your January 13th issue, that even after having attended a cinema performance and within an hour or two switching on the television one quickly loses all sense of looking on a small screen.

Woking. ERNEST H. ROBINSON.

THOUGH I have a great respect for the opinions of Mr. Alan Hunter, after reading his letter on television I begin to doubt whether he has seriously applied himself to watching the programmes. If he had I cannot believe that he would stigmatise them all as "incredibly poor entertainment." Whether I am abnormally susceptible or not I do not know (as a journalist of twenty years' experience I should think it hardly likely), but I have had the utmost enjoyment from some television programmes. "The Monkey's Paw" affected me so much that it was an effort to switch on the lights. Herbert Farjeon's review "Rush Hour" I would unhesitatingly describe as brilliant and original entertainment. I have seen programmes which have caused my flesh to creep and have almost made my hair stand on end; others which have made me laugh aloud; others that have brought a lump to the throat. What other play upon emotion does Mr. Hunter want?

I will, however, make this concession to him: that I have also seen programmes that have aroused no other feeling than one of surprise that the B.B.C. should think it worth producing them. So, like Mr. Hunter, I await the result of more expenditure on programmes with a more optimistic outlook. I stick to my point that the reason for disappointing sales does not lie altogether in the programmes.

L. MARSLAND GANDER.

Barnes.

WITH regard to the correspondence which has recently been published in reply to Mr. Warburton's criticism of television, as one actively engaged in the technical development of television I feel I must endorse wholeheartedly the letter written by Mr. Tyers.

I had intended to reply to Mr. Warburton's remarks myself, but Mr. Tyers' letter, in my opinion, leaves nothing to add as it is the opinion of everyone I have spoken to who have television receivers installed permanently in their own homes.

My own reaction from viewing is exactly as described by Mr. Tyers.

Dagenham. D. SHANNON,
Television Department,
Halcyon Radio, Ltd.

AND so, after over a year's experience, Mr. Tyers has discovered that television "is not regarded as an entertainment." So, apparently, has everyone else with a similar experience. How, then, is the dealer to frame his sales talk when trying to break down the natural resistance on the part of a listener to the idea of spending anything from £70 upwards on a television set? "Oh, no sir, this is not a new form of home entertainment! It is just something to have around the house. Every now and then you will want to stop a moment and look at the pretty pictures. And this will make you awfully sick of just listening—because you will then know what you are missing!" I have always been under the impression that the so-called friends of television were among its worst advocates. Mr. Tyer's little gem of logic proves it. ALAN HUNTER.

Sevenoaks, Kent.

RC v. Transformer Coupling

WITH reference to Mr. J. A. Hartley's letter in *The Wireless World* of December 23rd, I was extremely interested to learn that he has produced an amplifier "devoid of iron." I have thought for years that the absence of iron would go a long way towards perfection of reproduction, but I have always had to come to a full-stop at the output transformer.

I am aware that speaker coils can be wound for direct connection in output anode circuits, but have always thought that the increased weight of the coil would more than offset any advantages gained by the elimination of the output transformer (I am assuming that transient response is related to the inertia of the moving system).

If Mr. Hartley has found some simple method of overcoming this difficulty when using MC speakers, I am sure that readers would welcome the information if it is possible to disclose it. W. PUFFETT.

Welling, Kent.

I WAS very interested to read the remarks by "Nauticus" in the November 4th issue and by Mr. Hartley on paraphase amplifiers. Whilst agreeing that "peaks" which cause gridding give rise to severe distortion in paraphase RC amplifiers, I think that this applies to any type of RC coupling and is recognised as an inherent property which can only be overcome by designing the particular stage to handle "peaks" without running into grid current.

Comparing distortion between transformer and RC coupling due to this effect is in itself an admission of bad design in both cases.

Regarding paraphase, it would appear that the trouble is magnified due to a positive potential (caused by grid current) being applied to the grid of the phase-shifting valve which will cause the operating point to be moved with consequent risk of amplitude distortion which, in turn, is amplified by the stage to which it is coupled.

However, if the stage where the grid current originates is designed so that it can

B.T.S. ALL-WAVE TUNER

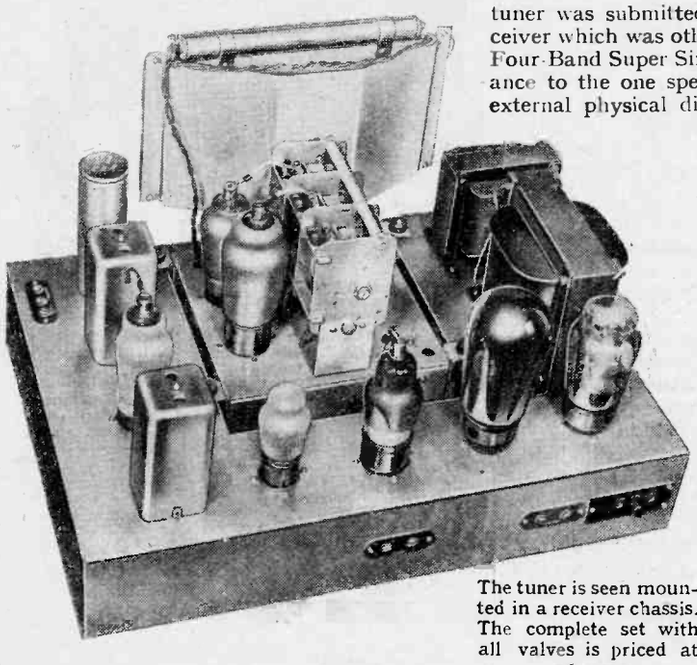

The tuner is seen mounted in a receiver chassis. The complete set with all valves is priced at 16 gns.

BRITISH TELEVISION SUPPLIES, LTD., of Faraday House, 8, Charing Cross Road, London, W.C.2, have produced a tuner for *The Wireless World* Four-Band Super Six, and it is listed at £5 15s. The tuner was submitted for test fitted to a receiver which was otherwise identical with the Four-Band Super Six. It is of similar appearance to the one specified and has the same external physical dimensions.

The tuner performed excellently on test and gave good results on all four wavebands. The actual coverages on the different bands are slightly different from those given in the constructional article on this receiver, but this is unimportant since the tuner is supplied with its own calibrated dial. The tuner can, therefore, be considered a satisfactory alternative component for this receiver.

The receiver itself was submitted for test as an example of this firm's commercial production of the Four-Band Super Six, and it may be said that it proved entirely satisfactory, the performance being negligibly different from that of the original receiver.

handle the "peaks" without any risk of the above, then the troubles would be non-existent and the amplifier comparable with any other. "PARAPHASE."

Potters Bar.

Relays and the P.O.

MAY I, as one having no connections with the radio industry in general and therefore not likely to be biased, but with a great interest in the trade itself, voice my agreement with your Editorial Comment in the issue of *The Wireless World* of January 6th?

It would appear to me an unnecessary expenditure, and competition against the wireless industry itself, for the Post Office to commence radio relay services.

Ince, Wigan. WM. WADESON.

New Apparatus

ELIMINOISE AERIAL

THE basic principle of an anti-interference aerial is that the collector wire, or wires, is erected outside the interference zone and the signal is then conveyed to the receiver by a transmission line that is unresponsive to any form of electrical radiation. This important fact must be borne in mind when considering the installation of such a system.

In most residential localities the required conditions can be complied with, though some initial experiment is usually necessary before the best position of the aerial is found.

The Belling-Lee Eliminoise anti-interference aerial is of this type, and it consists of 60ft. of aerial wire and 50ft. of low-impedance screened transmission line, the latter being connected at one end to the aerial by a special matching transformer, while at the other end it is joined to the receiver by another transformer.

Since the transmission line is screened it can be run along the top of a fence or even buried underground without affecting the efficiency of the system.

In some cases it might be best to erect the elevated aerial wire at the bottom of the garden and adopt one of the methods just mentioned to bring the signal to the receiver.

This, in fact, was found to give the best results with almost complete immunity from local electrical interference in the situation where this particular system was tested. It was found that if the aerial were not less than 10ft. from the house very little interference, which was mainly due to radiation from house wiring and domestic electrical appliances in nearby buildings, was noticeable.

Belling-Lee Eliminoise anti-interference aerial.

As the aerial was taken farther away the noise rapidly decreased, and at about 20ft. there was practically no interference at all.

It was then possible to erect an aerial with a vertical down-lead, the aerial matching transformer being secured to the garden fence and the screened transmission line run along the fence to the house.

The distance the aerial must be away from buildings will, of course, depend upon local conditions, and it can only be found by experiment.

The Eliminoise aerial kit is made by Belling and Lee, Ltd., Cambridge Arterial Road, Enfield, Middlesex, and, complete with all accessories, costs 55s.

W.B. CARBON MICROPHONE

THIS new carbon microphone recently introduced by Whiteley Electrical Radio Co., Ltd., Victoria Street, Mansfield, Notts, is a transverse current pattern with the relatively low impedance of approximately 150 ohms.

By designing it to have this impedance it has been possible to obtain a comparatively large output for a microphone of this kind, and it operates very satisfactorily with only 3 volts for polarising. The bakelite case in which it is assembled measures 2½in. in diameter, and it is 1¼in. deep.

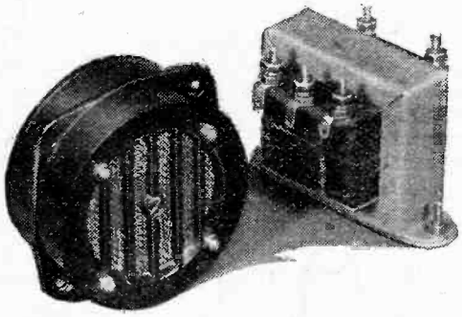
W.B. transverse current carbon microphone and 1 to 80 ratio transformer.

The instrument has a most attractive appearance, and the workmanship throughout is of a very high standard.

On test the microphone functioned in a perfectly satisfactory manner. Its relatively high level of output is, of course, a valuable feature, since it does not demand the use of a very high-gain amplifier. However, it does require more amplification than is provided in a broadcast set for gramophone reproduction.

Judged aurally, the output from the microphone is virtually constant over the major part of the audible scale, for speech is reproduced in quite a natural manner. It was felt, however, that the bass output was slightly below the average level, nevertheless, it was not obviously lacking in this region.

For the reproduction of music and for home recording it might be an advantage to introduce a little bass lift into the amplifier.

As our tests were made with the transformer supplied by the makers, the remarks regarding the microphone's performance actually relate to the microphone and its transformer. On the whole, the performance is very good, being well up to standard required for public address work.

The price of the microphone is £2 2s., and its transformer costs 10s.

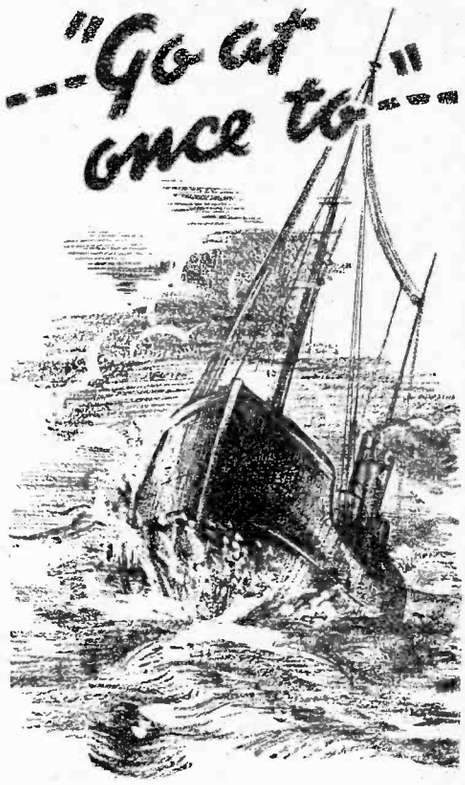

A drifter in the North Sea—trouble at home. Then, before the "news," comes that call, soon the boat speeds to port. Again unfailingly the message has gone out and been received. B.C.C. transmitter and boat's receiver, both T.C.C. condenser equipped, have provided the vital link. T.C.C. condensers are *always* fitted where apparatus just must not fail. This confidence in T.C.C. is the direct outcome of T.C.C.'s 30 years specialized research—of 30 years experience making and suppling condensers that never let you down.

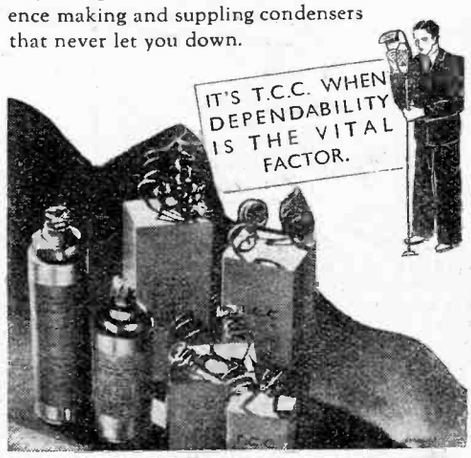

T.C.C.

ALL-BRITISH CONDENSERS

The Telegraph Condenser Co. Ltd., Wales Farm Rd., N. Acton, W.3

CA 3828

Recent Inventions

Brief descriptions of the more interesting radio devices and improvements issued as patents will be included in this section.

SHORT-WAVE "RESONATORS"

A TRANSMITTING or receiving valve V is enclosed inside a hollow metallic globe G, which serves as a "tank" or resonator circuit, the inductance being that of the metal globe, whilst the capacity is provided by two metal

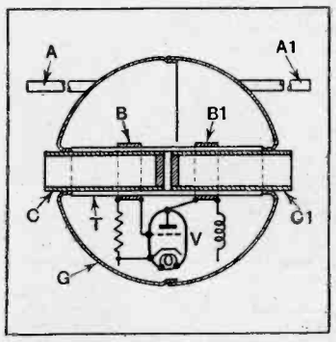

Ultra high-frequency generator, comprising spherical tuned circuit with valve inside.

tubes C, C1. The latter are mounted in a glass tube T so that they can be moved relatively to each other for tuning.

The electrodes of the valve are connected to metal bands B, B1 which provide a capacity coupling with the tubes C, C1. The valve, as shown, is arranged as a Hartley oscillator, but the device may be used for the reception as well as transmission of frequencies of the order 100 to 600 megacycles. A dipole aerial A, A1 is connected directly to the globe, which is made weatherproof.

Marconi's Wireless Telegraph Co., Ltd. (assignees of A. H. Turner). Convention date (U.S.A.), August 29th, 1935. No. 472351.

o o o o

CHASSIS CONSTRUCTION

WIRELESS sets are built up from standardised "units" which allow of mass production and, at the same time, give improved performance and operation. A relatively small number of such "units," assembled in different combinations, will cover the construction of any known type of receiver. The parts of each unit are assembled on a common base, which is pivoted or resiliently mounted at the front and rear, so as to allow its height to be varied. The various units are bonded together by transverse metal members.

G. W. Johnson (communicated by Philco Radio and Television Corporation). Application date, March 11th, 1936. No. 472046.

o o o o

FILM TELEVISION

WHEN televising pictures from a film it is found that a considerable number of the first pictures are liable to be lost or "wasted" whilst the driving motor is being run up to synchronous speed. On the other hand, if the motor is first run up to the required speed before being coupled to the film, the sudden application of the load causes it to drop out of step.

In order to avoid this difficulty, the motor is first coupled to an "artificial load" (which may be a set of paddles rotating in a fluid) and when it has reached the required speed it is switched over to the film apparatus. The artificial load is so arranged that it takes up the load whenever the film apparatus is unclutched, so that the motor can be kept running at synchronous speed as long as required.

Baird Television, Ltd., and G. Doyaston. Application date, March 20th, 1936. No. 472274.

o o o o

SCANNING SYSTEMS

IN order to prevent undesirable effects during the flyback stroke in scanning, it has been proposed to "block" one of the amplifiers by applying a heavy negative bias to its grid, so as to prevent the passage of the signals. The sudden stoppage is liable, however, to set up "pulses" which cause other disturbances on the screen.

As shown the valve V is "blocked" during the flyback

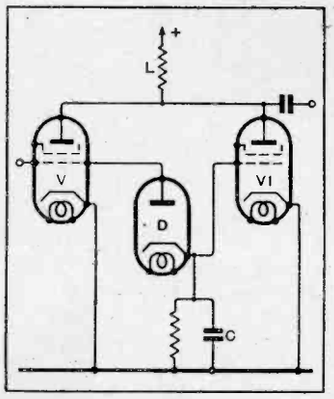

Method of rendering an amplifier inoperative during "flyback" period in scanning.

stroke, but an associated valve V1 is arranged to take the load during this period, so as to prevent any sudden cessation of the current through the load impedance L. The grid bias impressed on the valve V1 is derived from a condenser C, which is charged-up by the incoming signal voltage through a diode D.

Baird Television, Ltd.; V. A. Jones; and P. W. Williams. Application date, March 20th, 1936. No. 472401.

o o o o

ELECTRON MULTIPLIERS

RELATES to the type of amplifier in which electrons, emitted from a photo-sensitive cathode by the action of light, are caused to impact against a series of "target" electrodes, so as to produce secondary electrons which serve to augment the original stream.

It is stated that the number of secondary electrons produced by any given primary electron is increased if the latter is made to strike against the target electrode at an angle, so as to make a glancing contact, instead of impacting at right angles.

The target electrodes are accordingly arranged in strips which are inclined to the main axis of the tube in such a way that the electron stream in passing from

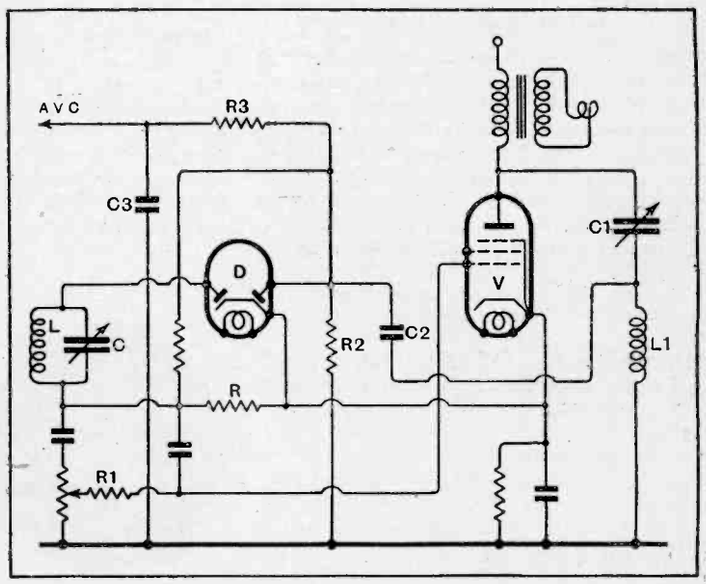

Circuit for amplified AVC which requires no additional valves.

cathode to anode strikes against each strip at an angle of approximately 30 deg., thereby increasing the effective amplification of the tube.

Baird Television, Ltd., and T. M. C. Lance. Application date, March 23rd, 1936. No. 472485.

o o o o

TUNING INDICATORS

THE tuning dial D of a cabinet receiver is mounted behind a fabric F which is substantially opaque so long as the intensity of

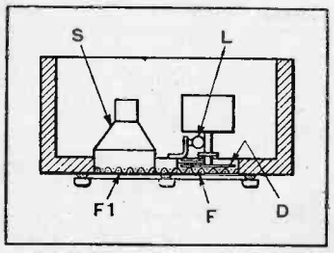

Tuning dial that becomes visible only when illuminated.

light falling on its external surface is greater than that coming from an internal lamp L. When the latter is lit, however, the scale markings on the dial are clearly visible. The fabric F is made impervious to sound.

The loud speaker S may be mounted, side by side with the tuning dial, as shown, and behind an extended portion F1 of the fabric that is permeable to sound. The arrangement serves to protect the tuning dial from being tampered with, and also screens it from dust.

J. A. Dreyfus. Convention date (U.S.A.), December 6th, 1934. No. 471796.

o o o o

AUTOMATIC VOLUME CONTROL

TO secure the advantage of amplified AVC it is usually necessary to provide an additional valve. According to the invention, one of the existing AF amplifiers is made to serve this purpose, thus saving the extra valve.

As shown in the drawing, one of the high-frequency circuits L, C is connected across one pair of diodes in a rectifier D, and the resulting DC voltage, produced across a resistance R, is applied *via* a volume-control R1 to the control grid of the output pentode V.

Amplified carrier frequencies appear in the output circuit L1, C1 and are fed through a condenser C2 to the second pair of diodes in the rectifier D. The resulting amplified DC voltages, appearing across the load resistance R2, are then passed back through a filter R3, C3 to the AVC line for the preceding stages in the set.

Kolster-Brandes, Ltd., and H. K. Robin. Application date, March 10th, 1936. No. 471812.

The British abstracts published here are prepared with the permission of the controller of H.M. Stationery Office, from specifications obtainable at the Patent Office, 25, Southampton Buildings, London, W.C.2, price 1/- each. A selection of patents issued in U.S.A. is also included.

The Wireless World
THE PRACTICAL RADIO JOURNAL
27th Year of Publication

No. 961. THURSDAY, JANUARY 27TH, 1938. VOL. XLII. No. 4.

Proprietors: ILIFFE & SONS LTD.

Editor:
HUGH S. POCOCK.

Editorial,
Advertising and Publishing Offices:
DORSET HOUSE, STAMFORD STREET,
LONDON, S.E.1.

Telephone: Waterloo 3333 (50 lines).
Telegrams: "Ethaworld, Sedist, London."

COVENTRY: Hertford Street.
Telegrams: "Autocar, Coventry." Telephone: 5210 Coventry.

BIRMINGHAM:
Guildhall Buildings, Navigation Street, 2.
Telegrams: "Autopress, Birmingham." Telephone: 2971 Midland (4 lines).

MANCHESTER: 260, Deansgate, 3.
Telegrams: "Iliffe, Manchester." Telephone: Blackfriars 4412 (4 lines).

GLASGOW: 26B, Renfield Street, C.2.
Telegrams: "Iliffe, Glasgow." Telephone: Central 4857.

PUBLISHED WEEKLY. ENTERED AS SECOND CLASS MATTER AT NEW YORK, N.Y.

Subscription Rates:
Home, £1 1s. 8d.; Canada, £1 1s. 8d.; other countries, £1 3s. 10d. per annum.

As many of the circuits and apparatus described in these pages are covered by patents, readers are advised, before making use of them, to satisfy themselves that they would not be infringing patents.

CONTENTS

	Page
Editorial Comment	71
Mobile Television—The B.B.C. Unit at Work	72
The Diode Detector	74
Compact 7-metre Portable Receiver	77
Automatic Gain Control Unit	78
Readers' Problems	82
Unbiased	83
News of the Week	84
Random Radiations	86
Letters to the Editor	88
New Apparatus Reviewed	89
Recent Inventions	90

EDITORIAL COMMENT

Empire Broadcasting

Is Decentralisation Better?

IT is well known that the reception of short-wave broadcasting at long distances is at times very unreliable, so that it may be still regarded as extremely difficult for the B.B.C. to visualise the Empire transmissions giving a hundred per cent. service in all the areas of Empire to which they are directed.

With the aid of what is known as "diversity reception," where arrangements are made to combine reception of a long-distance transmission from several receiving points, a very great improvement in reliability can be obtained as compared with reception conducted at one point alone. A description of B.B.C. methods adopted for diversity reception was given in a recent issue.

Relaying on Other Waves

Has the time come when those responsible for the Empire transmissions should consider the advisability of setting up intermediate relay stations on the Empire routes? Thus in the case of the programmes in Arabic we may expect that reception may not always be reliable when received direct from Daventry, but if we can visualise a diversity reception station for Daventry set up, say, in Cyprus and feeding a broadcasting station there, it might well be that a far more efficient service could be conducted.

Apart from these general circumstances there is also the point that a transmitting station relaying from Daventry for more local reception need no longer employ short waves. Longer wavelengths are easier for the inexperienced set user to tune, and the demand for sets could more easily be met at low prices because these sets are already produced in such large quantities for general reception conditions. Such a scheme would undoubtedly contribute very largely to hastening the wider distribution of broadcast receivers with which to receive the Empire programmes in these areas.

These proposals would apply equally well, of course, in other areas, and where broadcasting stations already exist on normal wavelengths the Daventry transmissions could be fed to one of these, provided the programmes were sufficiently sought after for local listeners to be willing to give up one of their wavelengths to the Empire transmissions, instead of merely relaying an occasional programme as is sometimes done.

A Standard Set

Overseas Demand

A NATAL newspaper, commenting recently on the desirability of extending Britain's export radio trade, said "Unless the British manufacturer makes up his mind to produce sets on the lines of American receivers, with absolute standardisation of parts . . . he can never hope to gain a footing, let alone compete with the American manufacturer."

Here we have a demand from overseas which echoes the views which we have repeatedly expressed in this journal that to meet competition overseas British manufacturers should agree upon a standard set, avoiding competition between themselves, so that the set could be exported at a low price. Standardisation would simplify all those problems of servicing and replacement parts. With only one set of parts to stock and no multiplicity of circuit diagrams, the problem of servicing overseas would be as good as solved.

Mobile Television

MACKINTOSH COVERS protected the Emitron cameras during the recent O.B. from the Chiswick works of the L.P.T.B. The operator at the top of the tower had the difficult task of keeping in focus the buses during the televising of the test skids. In spite of pouring rain the cameras picked up excellent pictures.

"STAND by, Flying Squad! Can you make Croydon Airport in fifty minutes?"

"We'll try. If the Boat-race finishes in ten minutes from now we'll manage. From Mortlake to Croydon will take twenty-five minutes and we must have five minutes to set up in front of the hangars. Yes, we can just do it."

"O.K., Flying Squad. We're putting out the announcement now."

Such is the dream of those who watch the caravan of green vans drawing up to its pitch at places like Denham, Whitehall, Elstree, Epsom, Chiswick. But the process of drawing up is long and complicated, and by no stretch of imagination could the existing outfit, with its eager but cautious engineers and production staff, be termed a flying squad.

But mobile it certainly is, and, given time, there is little within a radius of twenty or thirty miles of Alexandra Palace which it cannot "see" and pass on to the watching multitudes. From Central London it can transmit pictures of mirror-like quality over the twin-wire television cable, and outside this area the 1-kilowatt transmitter can send to Alexandra Palace pictures which, on occasion, are almost indistinguishable in quality from the cable transmissions.

Below Five Metres.

As readers know, the unit comprises three vans. The first contains the control room equipment, including the pulse generators, scanning gear, amplifiers and picture monitoring apparatus. In the second is housed the mobile radio transmitter which works on a "secret" wavelength just under five metres.

In the third van are the power generators which are used only if there is no adequate local power supply.

Whenever possible, the unit visits a selected site at least fourteen days before a scheduled transmission in order to send test signals. Often in this way local interference can be traced while there is still time; moreover, the fact that a good picture has once been obtained from the site is balm to the engineering mind as programme transmission time draws near.

Incidentally, before the radio unit can begin working, the Post Office must be notified, not only to comply with the Wireless Act, but to enable the authorities to check up on the possibility of interference with local radio activities. When the unit was recently testing at Croydon Airport, the DF station complained of interference. Fortunately, this was a false alarm, as far as television was concerned; the fact that a local nuisance chose that particular moment to offend was sheer coincidence, and the television crew breathed again! The mobile unit, by the way, is a station without a call-sign.

The necessary permit having been obtained, the local conditions have to be investigated, especially the power supply. What is needed is 22 kilowatts at 415 volts, 3-phase, and it is essential that the supply shall be free from fluctuations. It is a tribute to the smoothness of the London supplies that no trouble has ever been experienced in this direction.

Next comes the erection of the vertical dipole aerial, which is made directional to Alexandra Palace by taking compass bearings. The receiving aerial at the television station is usually mounted immediately above the vision and sound transmitting aerials, as, speaking theoretically, this is the only spot in Muswell Hill outside the wipe-out area. In practice, various other aerial arrangements have been tried out on the Palace terrace, every outside broadcast presenting its own special problems.

At present the mobile unit staff have no check on the quality of the received signal, and the picture on the monitors in the van is no criterion, but very soon the unit will be provided with its own receiver.

The Higher the Better.

The outstanding lesson of recent tests has been that aerial height is a much more important factor than the distance between the mobile unit and Alexandra Palace. Probably the best pictures ever transmitted by radio link were those received from Epsom Downs during tests in December. The next addition to the mobile unit will be an extensible mast

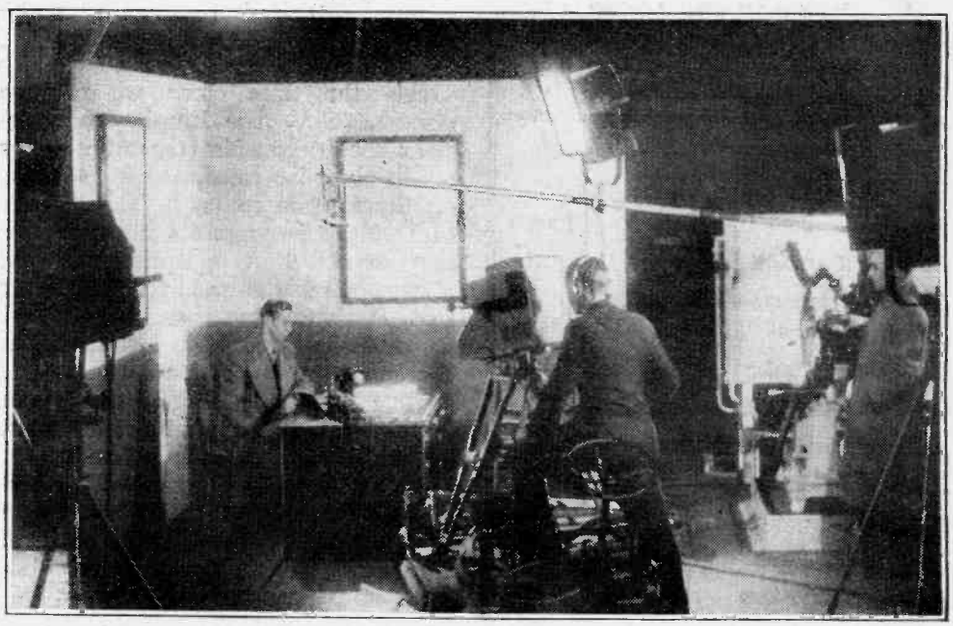

STUDIO TECHNIQUE. The staging of "inside" broadcasts also has to be undertaken by the O.B. squad as will be seen from this "set" in one of the L.P.T.B. "shops" at Chiswick.

THE B.B.C. UNIT AT WORK

which can be raised, if necessary, to 80ft.

After the preliminary tests the unit may flit to some other location, but the officials make every effort to be back on the site at least 48 hours before the programme transmission is due. This is helpful both to engineers and programme staff, for nothing can be over-rehearsed. Also, from a technical point of view, there is always the possibility that some unsuspected interference may have developed in the interval. The television engineer's life is not always a happy one.

The scene of action must be inspected to decide whether or not supplementary lighting will be required. Even the Super-Emitron may need a little assistance in a crypt. Camera positions must also be chosen, and here the picture is not the only consideration. The camera can even get in the way, as it did for a few moments during the first of the Circus transmissions from Olympia. One of the "Liberty" horses objected to it and lashed out with his hind legs; quick camera work was necessary. On another day one of the elephants showed violent antipathy to the camera "dolly" as it tracked forward—and anyone who has been televised will sympathise.

The Engineering personnel of the Mobile O.B. Vision Unit constitutes a section of the London Outside Broadcasts Engineering Section under the control of R. H. Wood and his assistant, M. C. J. Lloyd, with a complement of ten engineers, six drivers (two for each van) and two attendants. On the programme side there are Producer Philip Dorté, who controls camera and microphone mixes from the van in the same way as his confrères at the producers' desk at Alexandra Palace, and Alick Hays, Outside Broadcasts Manager. Very important, too, is the secretary, or "continuity girl," to use film parlance, who checks the scripts and sees that everything on the location is in its appointed place at transmission time just as at rehearsal. Nothing must be left to chance, for the appearance of spontaneity in the programme can only be achieved by an almost complete absence of spontaneity. Moreover, even the most accomplished people have a habit of "drying up" in front of the television camera, and a script is then as precious as a raft in shark-infested waters.

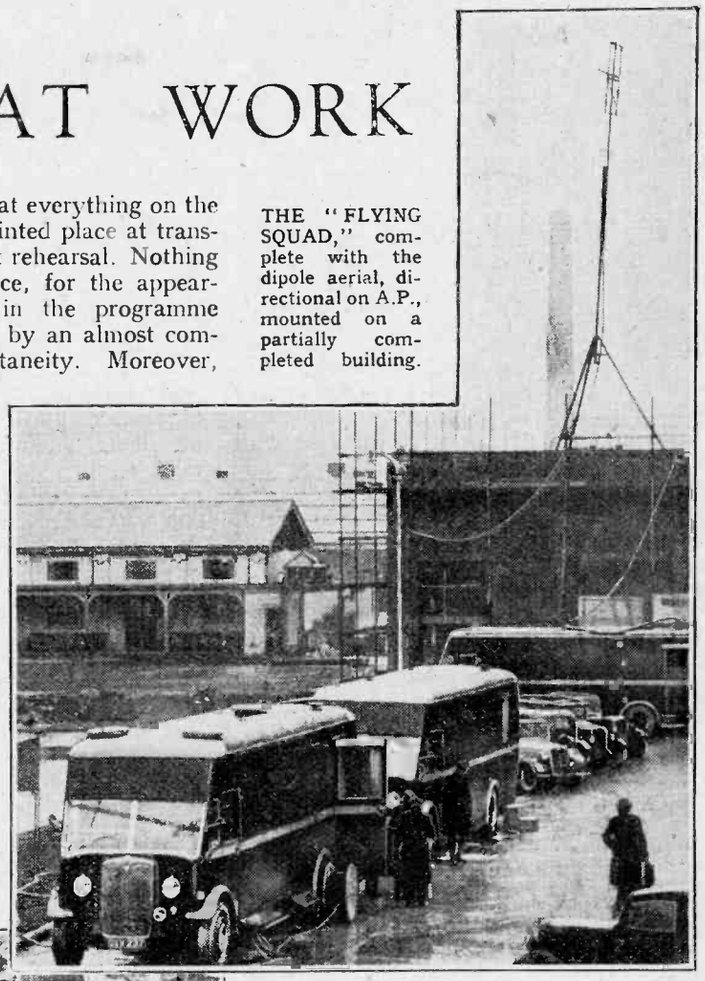

THE "FLYING SQUAD," complete with the dipole aerial, directional on A.P., mounted on a partially completed building.

BETTER WEATHER favoured the second day's broadcast from Chiswick, which showed a costume pageant of London's buses from the old Shillibeer of 1829 to the luxurious vehicle of to-day.

Throughout a transmission the producer in the van must keep in constant touch with the Productions Manager at Alexandra Palace, whose responsibility it is to see that the outside broadcast dovetails imperceptibly into the transmission from the studio. The programme may open with an announcement from Alexandra Palace, followed by a film sequence of a predetermined length.

A Recent "Job"

One of the most successful outside broadcasts to date was that staged a fortnight ago at the Chiswick Works of the London Passenger Transport Board. The transmission gave the complete story of how men are selected and trained for bus driving. This entailed the erection of three miniature "sets" in one of the machine shops, showing the office of the Superintendent of Instruction, the doctor's consulting room, and a corner of a technical class-room. Two candidates—one was a "stooge"—were submitted to oral, driving and medical examination, and the result was as amusing as it was instructive. One camera remained on the set, and the other two were on the bus testing and skidding ground.

The whole transmission would have made a bright interest film, but the difficulties the television producer had to contend with were more formidable than a film director's. Everything had to run through without a break for twenty-five minutes; a film director would probably have spent a week on the job!

Continuity was preserved in an interesting manner. The feature opened to show the Superintendent of Instruction interviewing the first applicant; this done, the man was whisked off to the testing ground, two hundred yards away, in a fast car. Not a long journey, but an impossible hiatus would have been created if viewers had had to wait until he got there, so the interval was filled up with an interview with Recruit No. 2, a very unpromising specimen. This faded over to No. 1's driving test, during which No. 2 was able to make his way to the testing ground, ready to take over while No. 1 was being rushed back for the medical examination.

It all required split-second timing, and there were no hitches. Just another day in the life of the mobile television unit.

The Diode Detector

HOW A VALVE *DETECTS*

By W. T. COCKING

SINCE every receiver includes a detector, it has become so commonplace that it is often taken for granted. For proper results it naturally requires careful design, and in this article the way in which it works is described in some detail.

IN the early days of broadcasting the grid detector was most widely used, largely on account of the ease with which good reaction could be obtained, for the only alternative detector then considered was the anode bend, which did not lend itself well to the attainment of good reaction effects. Later, however, the anode bend detector achieved some measure of popularity among quality enthusiasts, since it was found to introduce less distortion than the usual grid detector. Its popularity did not last very long, for when the operation of valves became better understood the grid detector could be properly designed and then gave a greatly superior performance and excelled the anode bend detector on the score of quality.

Under the title of the power grid detector it was widely used, and even to-day it has no serious objection from the point of view of quality, provided that it is properly operated. This correct operation theoretically demands rather precise adjustment of the RF input voltage, for the latitude between underloading and overloading is quite small. In practice, however, there is more latitude than is often believed, for little *audible* distortion is caused by quite large underloading, much less, in fact, than is obtained with some modern detectors.

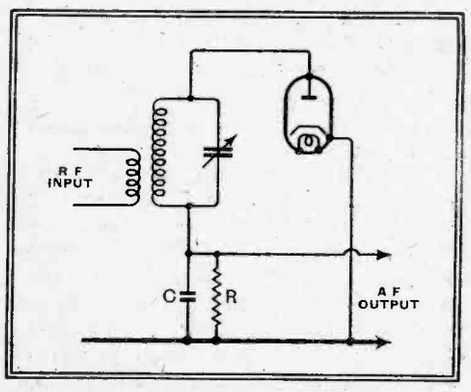

Fig. 1.—The basic circuit of a diode detector is shown here.

The grid detector still has its sphere of usefulness, even in quality apparatus, but it is not widely employed because most modern sets include AVC and it is usually desirable to operate with a larger detector input than is possible with a grid detector. The diode is consequently almost universally employed. At the time of its introduction it was generally believed to introduce less distortion than any other detector, but it is now known that this is not necessarily the case. In fact, as often used, it can cause quite a lot of distortion. Like everything else, it must be properly designed if it is to give of its best.

The operation of a detector is much more difficult to understand than that of an amplifier, and it is for this reason that so many mistakes are made in choosing the correct operating conditions. This is especially the case when quality is the main requirement.

The basic circuit of the diode detector is shown in Fig. 1, and it will be seen that the tuned circuit, across which the input RF voltage is developed, the diode, and the load circuit RC are connected in series. When there is no RF input one would naturally expect there to be no anode current, but this is not the case, for some of the electrons emitted by the cathode have sufficient velocity to reach the anode in spite of the absence of a positive potential on this electrode. There is thus an anode current flowing from anode to cathode in the external circuit, and this sets up a potential difference between the ends of the load resistance R in such a direction as to make the anode of the valve negative with respect to the cathode. The precise anode voltage obtained depends upon the characteristics of the diode and upon the value of R. Most valves pass anode current until the anode voltage is more negative than −0.9 to −1.5 volt, and with the usual values of resistance the anode voltage with no signal is some −0.5 to −1.0 volt.

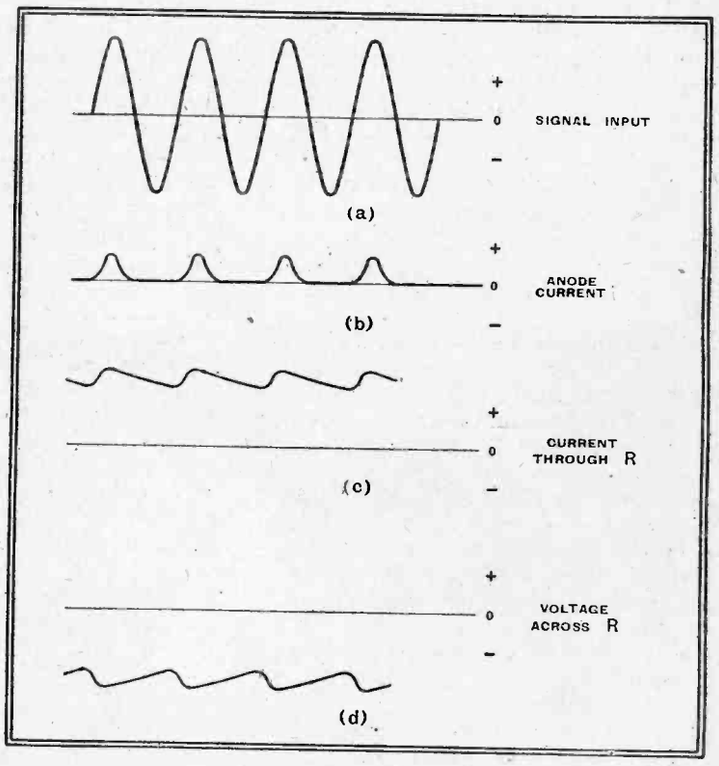

Fig. 2.—The input RF voltage to the detector is shown at (a) and the form of the anode current is indicated at (b). The resulting current through and voltage across R are as shown in (c) and (d).

The Diode Current

The idea of anode current flowing with a negative anode voltage may be a little startling at first, but the explanation is simple. The electrons emitted by the cathode have a certain initial velocity, and this is sufficient for some of them to reach the anode without the attraction of a positive potential on this electrode. The velocity of some of the electrons, in fact, is sufficient to carry them to the anode in spite of the repulsion of a negative potential on this electrode, and not until the anode potential is more negative than −0.9 to −1.5 volt is the repulsion sufficient to turn back all electrons.

Now when we apply an RF input to

The Diode Detector—

the detector we find that the anode current increases and the anode potential becomes more negative with respect to the cathode. With an input of 10 volts RMS, the anode potential may become as much as −12 volts. This explains the popularity of the diode, for this voltage can be used for AVC purposes, but it at once raises a number of questions such as: How can the diode work when it is biased beyond current cut-off? and Where does the voltage come from?

Suppose we apply an unmodulated RF input. Assuming that the capacity of C is large enough, the full voltage is applied across the diode, and after allowing sufficient time for the steady state to be reached we find that the conditions are as in Fig. 2. During a portion of the positive half-cycles of the input voltage the diode conducts and charges the condenser C; the anode current thus flows in pulses as in Fig. 2 (b). The current through R is continuous, but fluctuating, however, for during the non-conducting intervals of the diode the condenser C is discharging through R. The current through R is thus of the form shown at (c); it always flows but increases in value whenever the diode becomes conductive. The form of the voltage across R is the same as that of the current, and is shown at (d).

Detector Input Resistance

Most of the time the diode does not conduct, and the greater the efficiency of rectification the smaller is the conduction time. At equilibrium the quantity of electricity flowing into C through the resistance of the diode during the conduction time equals that flowing out of C through R during the non-conduction time. As the diode resistance is much lower than R, the conduction time is much smaller than the non-conduction time, with the result that the diode actually conducts only on the positive tips of the input signal.

Ideally, the steady voltage across R would be equal to the peak RF input voltage. In practice it is less and decreases as R and C are made smaller, and as the diode resistance increases; with normal values it is some 70-90 per cent. of the peak input.

Since there is a voltage across the load resistance R and a current through it there is a certain amount of power dissipated in it. This power must be furnished by the RF input and power at radio-frequency is drawn from the tuned circuit. This is usually allowed for in design by taking into account the detector input resistance, which is defined as a fictitious resistance which, if connected across the tuned circuit instead of the detector, would absorb the same power as the detector.

If we call the input resistance Ri and the RMS voltage across the tuned circuit E_{RF}, the input power is E^2_{RF}/Ri. The detector efficiency we represent by n.

The total effective rectified voltage acting in the circuit is $\sqrt{2}\,E_{RF}$ and the rectified current is $\sqrt{2}\,E_{RF}\,n/R$, so that the total power is $2\,E^2_{RF}\,n/R$. Consequently $Ri = R/2\,n$. When the efficiency is high the input resistance becomes nearly equal to one-half the load resistance.

The foregoing only holds for large inputs. With very small inputs the diode is normally conductive over the whole cycle of input voltage and the action is quite different. The input resistance is also affected. With zero input the input resistance tends to infinity if the diode characteristics are such that the valve passes no current. In the more usual case, however, where the valve does pass current, the input resistance is equal to the AC resistance of the diode at its operating point. This figure is often much lower than one-half the load resistance.

If a curve is plotted to show the relationship between RF input voltage and the output voltage across the load resistance it will normally be found that the output is not proportional to the input for input voltages less than a certain figure, but that the output is proportional to the input, so that the characteristic becomes straight, for inputs greater than this figure. The extent of the curved region depends upon the diode characteristic and upon the value of load resistance employed. It is at a minimum with a low resistance diode and a high value load resistance, and commonly extends up to some 1 volt input.

When the input is modulated we are more interested in the output at modulation frequency than in the steady output voltage, although this also is important for AVC purposes. The modulation, however, is nothing more than a variation in the carrier amplitude, and it consequently causes a corresponding variation in the "steady" output voltage. The output can be regarded as a steady voltage, corresponding in value to that produced by an unmodulated carrier of the same amplitude, upon which is superimposed an alternating voltage of modulation frequency.

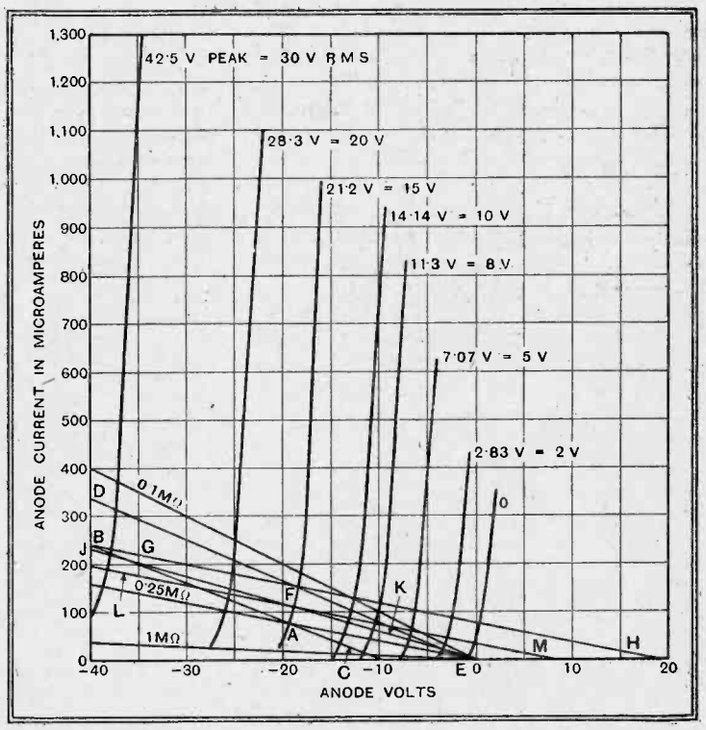

Fig. 3.—The characteristic curves of a typical diode detector are shown here. The valve is a 6H6 with the two diodes in parallel.

We have seen that the steady-voltage detector output E is equal to $\sqrt{2}\,E_{RF}n$ for an unmodulated input. For a modulated input, the steady voltage is the same and the component E_{AF} at modulation frequency is $\sqrt{2}E_{RF}nm$. This is the peak value of the output; the RMS value is, of course, $E_{RF}nm$. The symbol m represents modulation depth. For 100 per cent. modulation $m = 1$ and the peak output is equal to the steady voltage.

The Audio-Frequency Output

With this degree of modulation the carrier amplitude varies from zero to twice the unmodulated level. The initial bend in the detector characteristic must consequently cause distortion, chiefly second harmonic. This can be made as small as we like, however, by using a large enough input so that the bent portion of the curve is only a small proportion of the total length of the curve over which the signal sweeps. Although the avoidance of distortion on 100 per cent. modulation is impossible, it is theoretically possible to obtain freedom from distortion on 99.99 per cent. modulation. In practice, 90 per cent. modulation can be handled without undue difficulty.

It is this initial curvature of the characteristic which is responsible for the practice of using a large detector input. Its bad effects, however, are often overstressed, and quite small inputs can be used without there being audible distortion. With very small inputs, 0.1 volt or less, the second harmonic can be as high as 25 per cent.; this represents very serious distortion, but inputs as small as this are never used nowadays.

If the detector is operated at a large input so that it is theoretically free from distortion for very deep modulation, there is a grave risk of overloading the preceding stage. For the avoidance of distortion in this RF or IF amplifier it must be linear for outputs up to $2\sqrt{2}\,E_{RF}$. A detector input of 10 volts RMS might easily be selected for distortionless detection, and with this input the previous stage must be

The Diode Detector—

linear up to 28.28 volts peak output if it is not itself to introduce amplitude distortion. In a set fitted with AVC the detector input may easily exceed 10 volts in local reception.

Non-linearity in the pre-detector stage is a very common cause of distortion, and nowadays there is probably more distortion caused by it than by the operation of the detector with too small an input. It is of course, possible to design the RF or IF stage to give any required output, but it is not always economical to do so. In the writer's experience it is better to err on the side of underloading the detector than to risk overloading the preceding stage.

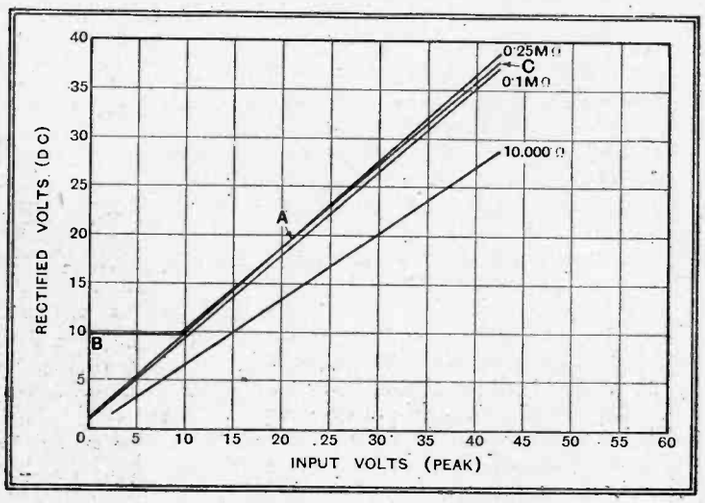

Fig. 4.—The dynamic characteristics for the load values marked are given here.

Although it is possible to calculate the performance of a detector from the diode characteristic, it is rather a troublesome process, and it is much easier to do it from a set of curves for different inputs. These curves are analogous to the familiar anode-volts—anode-current curves of a triode and show anode-volts plotted against anode-current for a series of values of input RF volts. A typical set of such curves is shown in Fig. 3 and three load lines are drawn for values of R of 0.1 MΩ, 0.25 MΩ and 1.0 MΩ. A widely used value is 0.25 MΩ, and the dynamic characteristics for this, and also for a load of 0.1 MΩ, are shown in Fig. 4. These curves are derived by taking the intersections of the valve curves with the load lines. It will be seen that the variation in load makes very little difference to the output, because even the lower value is large compared with the diode resistance.

Load Resistance Values

From these curves we can evaluate the efficiency n by dividing the output voltage by the input voltage necessary to produce it. Thus, for a 0.25 MΩ load $n=0.925$ and for a 0.1 MΩ load $n=0.89$. Owing to the high values of load resistance relative to the diode resistance the curvature at small inputs can barely be detected on the scale to which these curves are drawn, and with any input exceeding a few volts it causes negligible distortion.

A third curve is shown for R = 10,000 ohms, and in this the curvature is readily apparent. The efficiency is also low for $n=0.675$ only. From the equation given earlier we see that the input resistance Ri is 135,000 Ω, 56,000 Ω, and 7,400 Ω for values of R of 250,000 Ω, 100,000 Ω, and 10,000 Ω respectively. The reason for the avoidance of low values of load resistance wherever possible will now be clear, for such values not only give a less straight dynamic characteristic, but give also a low value of input resistance and low rectification efficiency. The low input resistance damps the input tuned circuit and reduces the amplification and selectivity of the RF amplifier while also reducing the undistorted output obtainable from it.

A high value is thus very desirable for R, but, as will be seen later, there are considerations which severely limit its value in practice.

(To be concluded.)

News from the Clubs

Tottenham Short Wave Club

Hon. Sec.: Mr. E. Jones, 60, Walmer Terrace, Firs Lane, Palmers Green, London, N.13.

The club is holding three further visitors' evenings on February 24th, 25th, and 26th, and all persons interested in wireless will be welcome. Applications for tickets, which will be available from February 4th, should be forwarded to the Honorary Secretary, a stamped addressed envelope being enclosed.

Leicester Amateur Radio Society

Headquarters: Winn's Café, Granby Street, Leicester.
Meetings: Tuesdays at 7.30 p.m.
Hon. Sec.: Mr. T. Cribb, 55, Knighton Drive, Leicester.

The club has prepared the following programme for the remainder of the season:—

Feb. 1st: "My Ideal Programme." A general discussion on members' likes and dislikes.
,, 15th: Lecture-demonstration; Elementary Transmitting.
Mar. 1st: 5-metre Evening. Members are requested to bring receivers, etc., for test purposes.
,, 15th: Some Practical Points in Television Reception. Lecture by Ediswan.
,, 29th: Lecture-demonstration given by Mr. E. Cholat, of Lissen.
Apr. 12th: Date reserved for Lecture by Mr. Mee, of Parmeko.

Eastbourne and District Radio Society

Headquarters: The Technical Institute, Eastbourne.
Hon. Sec.: Mr. J. P. Glickman, "Kersal," Broderick Road, Hampden Park, Eastbourne.

The annual general meeting took place on January 7th. An exhibition of radio apparatus, such as was used by Lodge, Fleming, and Hughes in their early experiments in wireless communication excited considerable interest. It is hoped to retrace the steps taken by these pioneers by repeating their experiments during the season.

Slade Radio

Headquarters: All Saints Parochial Hall, Broomfield Road, Slade Road, Erdington, Birmingham.
Meetings: Alternate Thursdays at 8 p.m.
Hon. Sec.: Mr. G. C. Simmonds, 38, Rabone Lane, Smethwick.

The society have arranged the following events for the second half of the season:

Jan. 27th: Junk Sale.
Feb. 8th: Lecture by Mr. Quarrington, of Cossor's, on Cathode-ray Tubes and their Application. Meeting place (in the City) to be announced later.
,, 24th: Modern Amateur-band Communication Receivers, by Mr. G. Brown, G5BT.
Mar. 10th: Direction-finding Night.
,, 24th: Principles of Synchronous and Asynchronous Motors, by Mr. A. B. Cape.

Morse practice class at 8 p.m. each meeting except February 8th.

The Experimental Radio Society of Egypt

Hon. Sec.: Mr. G. Moens, P.O. Box 254, Cairo, Egypt.

This radio society has been formed to represent amateur radio interests in the Near East; it is also the official national society of Egypt. It has as its Patron and Hon. President H.H. Prince Abd El Moneim.

The society's QSL bureau is a distributing centre for cards to and from transmitting amateurs in Egypt, Palestine, Sudan, and Iraq.

An official magazine known as the E.R.S.E. Bulletin is published on the first of each month, and it contains the latest information on the activities of radio experimenters operating in the Near East.

Dollis Hill Radio Communication Society

Headquarters: Braintcroft Schools, Warren Road, London, N.W.2.
Meetings: Alternate Tuesdays at 8 p.m.
Hon. Sec.: Mr. J. R. Hodgkyns, 102, Crest Road, Cricklewood, London, N.W.2.

An interesting cine-film lecture on the subject of Valves was recently given by Mr. W. G. J. Nixon, of the G.E.C. There was an attendance of about 50. Members are asked to note that the next meeting will be on February 25th.

Kingston and District Amateur Radio Society

Headquarters: The Three Fishes Hotel, Richmond Road, Kingston, Surrey.
Meetings: Alternate Wednesdays at 8 p.m.
Hon. Sec.: Mr. D. N. Biggs, 44, Pooley Green Road, Egham, Surrey.

The recent demonstration by the Premier Supply Stores of their amplifying and transmitting apparatus proved very popular. At a later date there was a debate between G8IP and G8HY on Telegraphy v. Telephony. On February 2nd a demonstration of their 56 mc/s superheterodyne receiver and other apparatus will be given by Radio Reproducers. There will be a further meeting on February 16th.

The East Dorset and West Hants Radio Club

Headquarters: "Tintlaw Lodge," Wimborne Road, Poole, Dorset.
Hon. Sec.: Mr. D. M. Williams, "Amberley," Cornwell Road, Poole, Dorset.

The inaugural meeting of the club was held on January 12th, when a committee was elected. Seventeen members were present. It was decided to hold the next meeting on February 12th at which Mr. H. L. Hunt of the I.S.W.C. has volunteered to demonstrate his home-made short-wave receiver.

Radio Physical and Television Society

Headquarters: 72a, North End Road, West Kensington, London, W.14.
Hon. Sec.: Mr. C. W. Edmans, 17, Prince George's Avenue, Raynes Park, London, S.W.20.

The first meeting of the second half of the session will be held on January 28th, at 8.15 p.m. It has been decided to hold weekly meetings for the remainder of the session. Recent talks have included one entitled "Microphones" by Dr. C. G. Lemon, another by Mr. M. F. Hamlet on "Some Interesting Chemical Phenomena," and a lantern lecture by Mr. W. Nixon, of the Osram Valve Technical Department.

Compact 7-Metre Portable Receiver

SENSITIVE FOUR-VALVE BATTERY SUPERHET

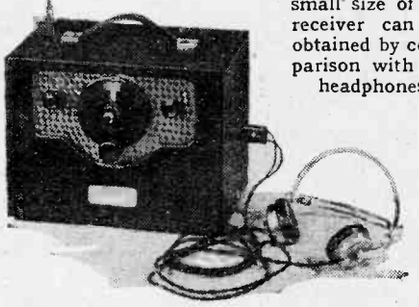

Some idea of the small size of the receiver can be obtained by comparison with the headphones.

WITH the increased activity on the ultra-short waves between five and ten metres a great deal of investigation on wave propagation and interference has been and still is being carried out. Messrs. Peto Scott Electrical Instruments (Holdings), Ltd., have recently designed and constructed a compact battery operated portable set for this purpose for a Government Department.

The receiver, which measures only 12in. x 9in. x 7½in., weighs approximately 18lb. and is used with headphones. The aerial is a vertical rod, made in aluminium for lightness, which plugs into a socket on the top of the cabinet. A second socket is provided for horizontal tests and the aerial itself is in two sections for convenience in carrying. The superheterodyne circuit employed has four valves in the following capacities. Triode hexode frequency changer, RF pentode IF amplifier, triode second detector with reaction, transformer coupled to an output tetrode. The grid and oscillator coils are air spaced and mounted directly across their respective tuning condensers to ensure short connections.

The lower frequency oscillator beat is employed, the grid and oscillator inductances being identical and the tuning capacities different. This provides very efficient frequency changing on the ultra-short waves. The IF amplifier, which employs a frequency of two megacycles, is a tuned anode arrangement, the first coil being soldered directly to the anode leg of the Fc valve while the second coil which carries a reaction winding is contained in a screened can at the back of the chassis. These coils are iron cored and tuned by small mica trimmers. A fairly broad band width is provided which is an advantage for interference investigations. The leaky grid detector has a resistance condenser feed circuit which by keeping the steady DC flow from the transformer primary enables a small transformer with a high permeability core to be used. The headphones are connected directly into the anode of the output tetrode by a plug and jack on the side of the cabinet, and space exists inside the cabinet for the headphones to be carried between the batteries and the chassis.

The compact layout employed has enabled most of the RF connections to be made by the components themselves in the case of wired-end condensers and resistances. The wave range is approximately 6-10 metres and with the single ratio slow motion dial the tuning is reasonably easy owing to the small tuning capacity employed.

In operation the receiver is stable and free from hand capacity effects, a point that will, no doubt, be appreciated by those who have experienced this difficulty with portable apparatus. In the *Wireless World* laboratory, which is a steel framed building, good headphone signals from both sound and vision transmitters at Alexandra Palace were received.

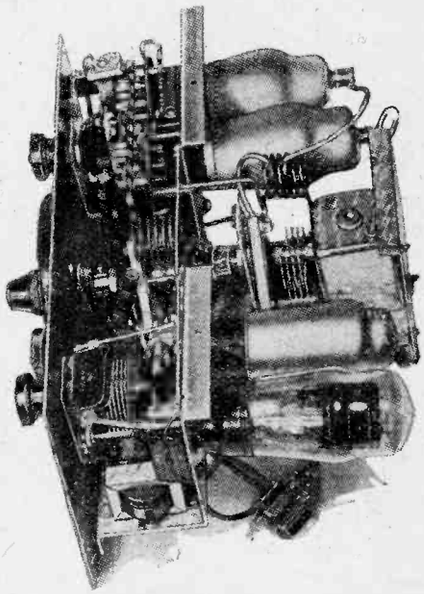

An unorthodox layout has been deliberately adopted to ensure all RF leads being as short as possible.

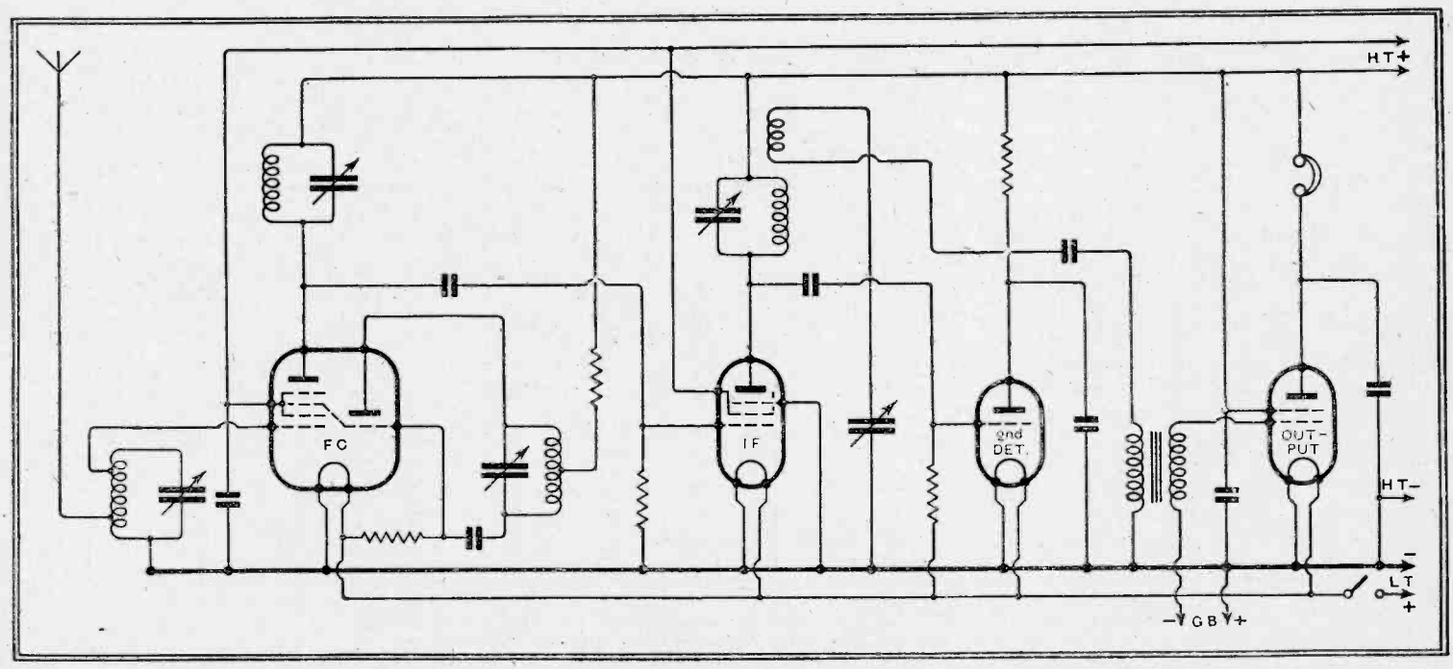

Theoretical circuit diagram of the receiver. Iron-cored IF coils are used and regeneration is provided by the second detector.

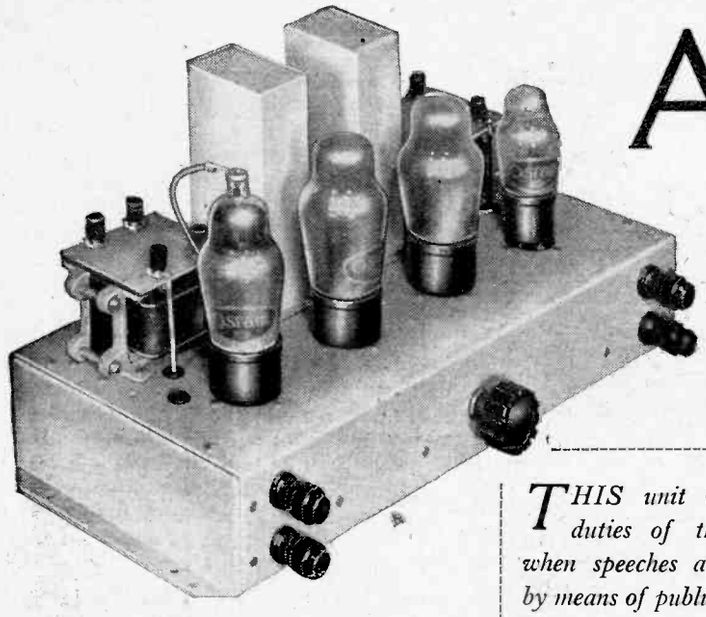

Automatic Gain

OUTPUT MAINTAINED AT A PREDETERMINED LEVEL BY A FORM OF AUDIO AVC

THIS unit will take over the duties of the control engineer when speeches are being reproduced by means of public address equipment. It can be adjusted to give a predetermined level of sound output as it maintains a virtually constant input to the main amplifier even though very great changes in sound intensity occur in the vicinity of the microphone.

IN recent years there has developed a new activity that, since it makes use of the electrical amplification of sound, is closely allied with wireless. It is known as public address work, and one of the most important items in the equipment is the microphone.

Most modern microphones are extremely sensitive, but while they respond to very weak sounds their electrical output is not large and often at the most it does not exceed a small fraction of a volt.

It does not necessarily follow that because a microphone is sensitive it should give a large output, and this may have led to some confusion among those not fully conversant with the characteristics of the latest types now in general use.

It is thus necessary to employ considerable amplification to operate even a modest size loud speaker, and it is when the required amplification is applied that the real sensitivity of the microphone becomes apparent.

Their high sensitivity has enabled the hand type microphone to be dispensed with, and the speaker can converse in a normal manner even though he be several feet away from the microphone. Of course, much more amplification is then needed than were he to direct his voice into the instrument, or hold it within a few inches of the mouth.

The difference in electrical output under these two conditions is very considerable, as it would also be if the speaker, though several feet away, were suddenly to raise his voice, or someone nearby were to utter a loud protest or acclamation.

Sudden increases of sound in the vicinity of the microphone cannot very well be guarded against in public address work, and it is then that the engineer in charge of the amplifier has to maintain a very strict vigil, always being ready at any moment to reduce the amplification to maintain the normal level. Furthermore, a sudden rise in input strength is almost certain to cause serious overloading of the amplifier unless checked immediately, and the distortion thereby produced is far from pleasant.

Then, again, some little time may elapse before the engineer realises the abnormal sounds have ceased, and in the meantime some of the oration has been lost owing to inadequate amplification.

One solution to this problem would be an automatic control of the output, operated by the strength of the sounds impressed on the microphone. As this is not easy to arrange, an alternative system

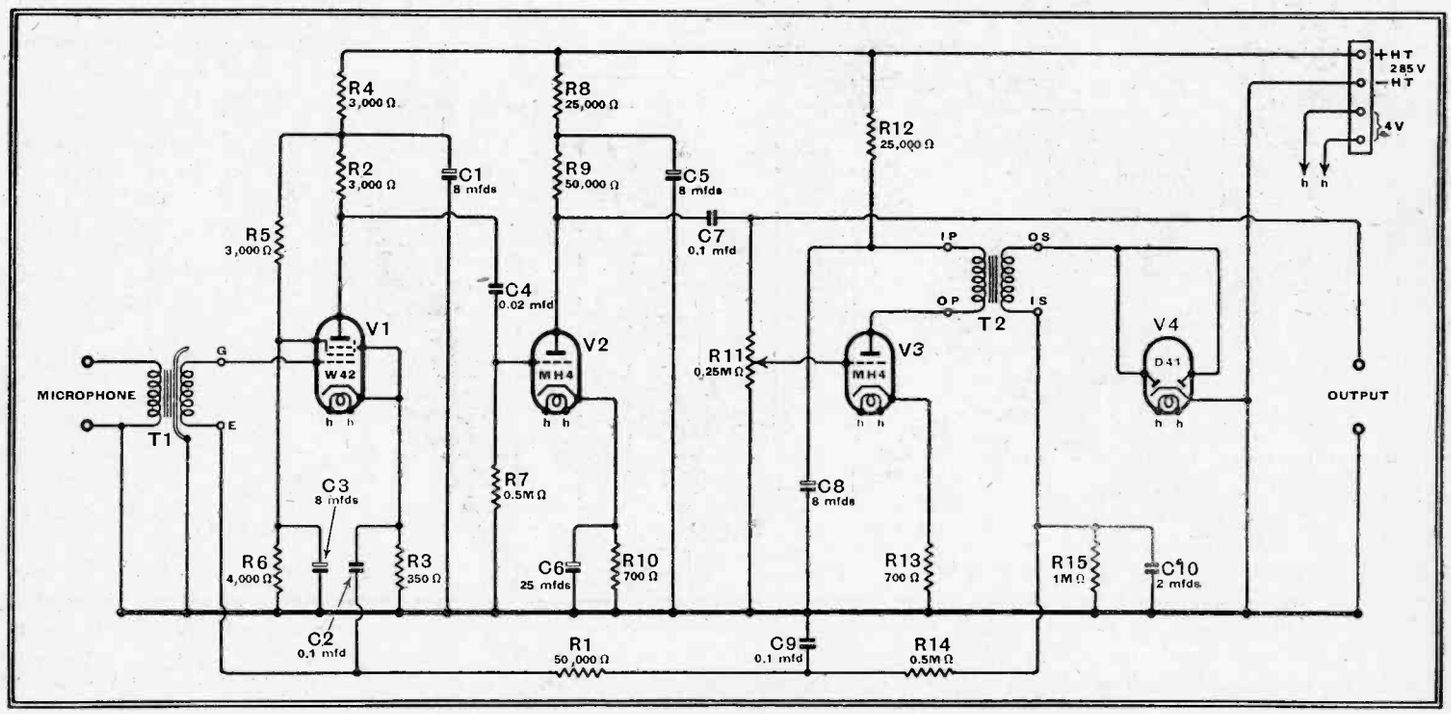

Fig. 1.—Theoretical circuit of the automatic gain control unit, which is AC-operated and embodies four valves.

Control Unit

is available in which a pre-amplifier is employed which maintains a reasonably constant input to the main amplifier for widely different sound intensities at the microphone.

The system is basically the converse to volume expansion and might be described as volume compression, or an audio form of AVC.

The circuit of a unit designed to operate as an automatic gain control microphone amplifier is given in Fig. 1.

It employs four valves, two of which amplify the signal while the remaining pair control the amplification of the first two.

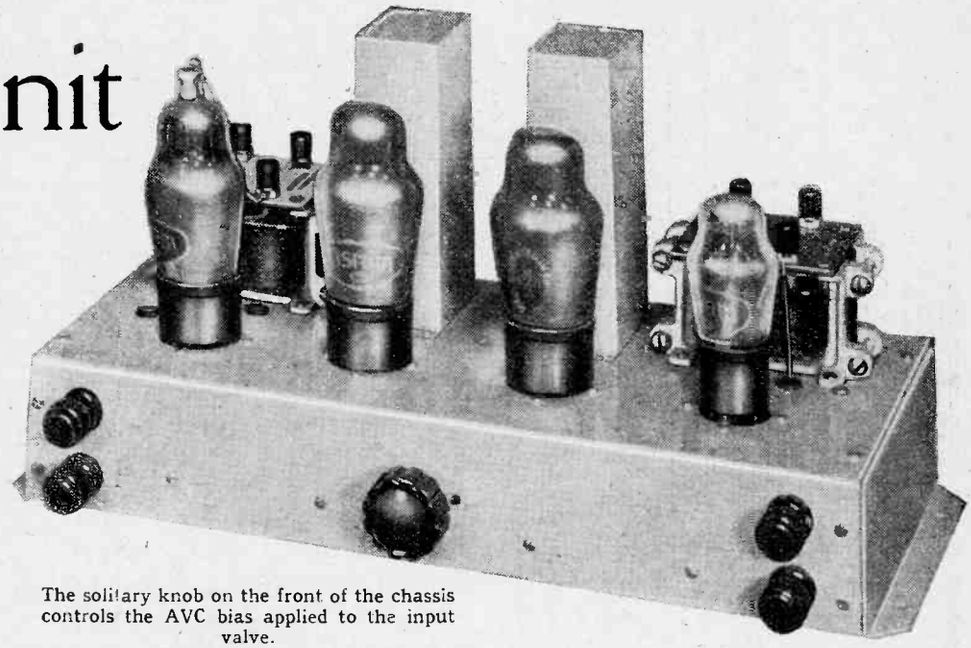

The solitary knob on the front of the chassis controls the AVC bias applied to the input valve.

AVC Circuit

The output of the microphone is applied to the normal control grid of a W42 valve which is arranged to operate as a low-gain amplifier. The amplified output is then fed to a MH4 valve, V2, which operates as a normal audio-frequency amplifying stage.

The MH4 valve, V2, passes the amplified signal to the output terminals and hence to the main amplifier, but a portion of its output can be diverted to the second MH4 valve, V3. Here further amplification takes place, after which the signal is rectified by the D41 diode and the resultant DC component used as additional negative bias for the W42 valve.

The operation is fundamentally the same as the ordinary AVC employed in a broadcast set, only it functions on the audio signal, whereas in a receiver the AVC is derived from the carrier wave.

Initial operation of the control circuit is quite rapid, and even though one shouts into the microphone only the first syllable of a word is emitted at excessive volume. The bias voltage does not, however, disappear immediately the input sounds cease, as the time constant of the condenser C10 and resistance R15 in the diode circuit is relatively high, being about two seconds. This high time constant is chosen to maintain the gain at the required low value during periods of short duration, such as between words or when the speaker makes a short pause for breath.

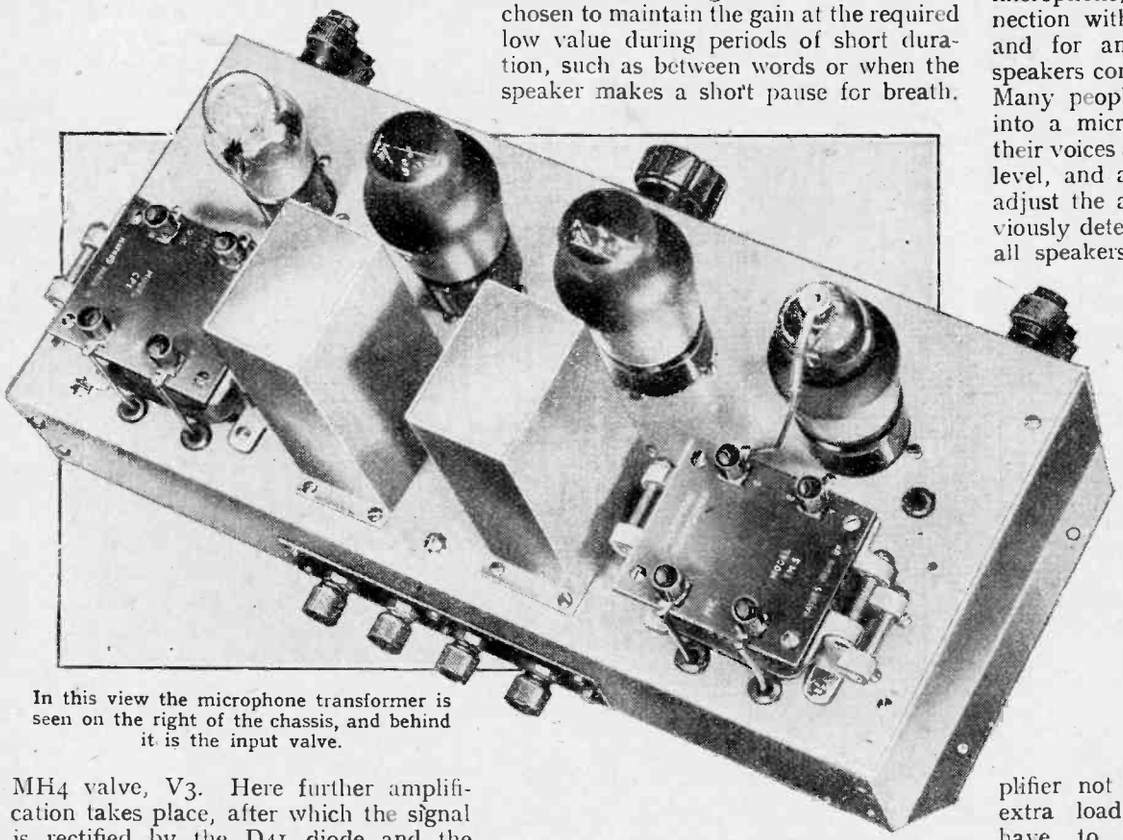

In this view the microphone transformer is seen on the right of the chassis, and behind it is the input valve.

Were the return to the initial high gain too rapid the reproduction would be accompanied by a succession of loud bursts of sound at the beginning of each word uttered.

Control of the bias voltage produced by the signal is effected by varying the input to the rectifier amplifier V3, the potentiometer R11 being included for this purpose.

Applications

Since the function of the unit is to limit the output, and consequently tends to smooth out changes in intensity at the microphone, its usefulness is mainly in connection with the reproduction of speech and for announcements when different speakers come to the microphone in turn. Many people not accustomed to talking into a microphone are inclined to raise their voices above a normal conversational level, and as the unit will automatically adjust the amplification to the level previously determined by the setting of R11, all speakers will produce approximately the same sound output from the loud speakers.

Obviously, it has a very restricted usefulness in the reproduction of music, as its limiting effect will produce an unnatural uniformity of sound output.

As this unit is intended to be used with an existing amplifier it is not provided with a separate power supply, as in all probability the necessary voltages will already be available. It requires 2.9 amps. at four volts for the valve heaters and about 35 mA at 280 to 290 volts for their anodes.

Should the main amplifier not be capable of carrying this extra load a small power pack will have to be constructed. A mains transformer giving 300-0-300 volts and with two LT windings, one for the rectifier with a 4-volt output of 2.5 amps. and another, also of 4 volts, but giving 3 amps., will satisfy the require-

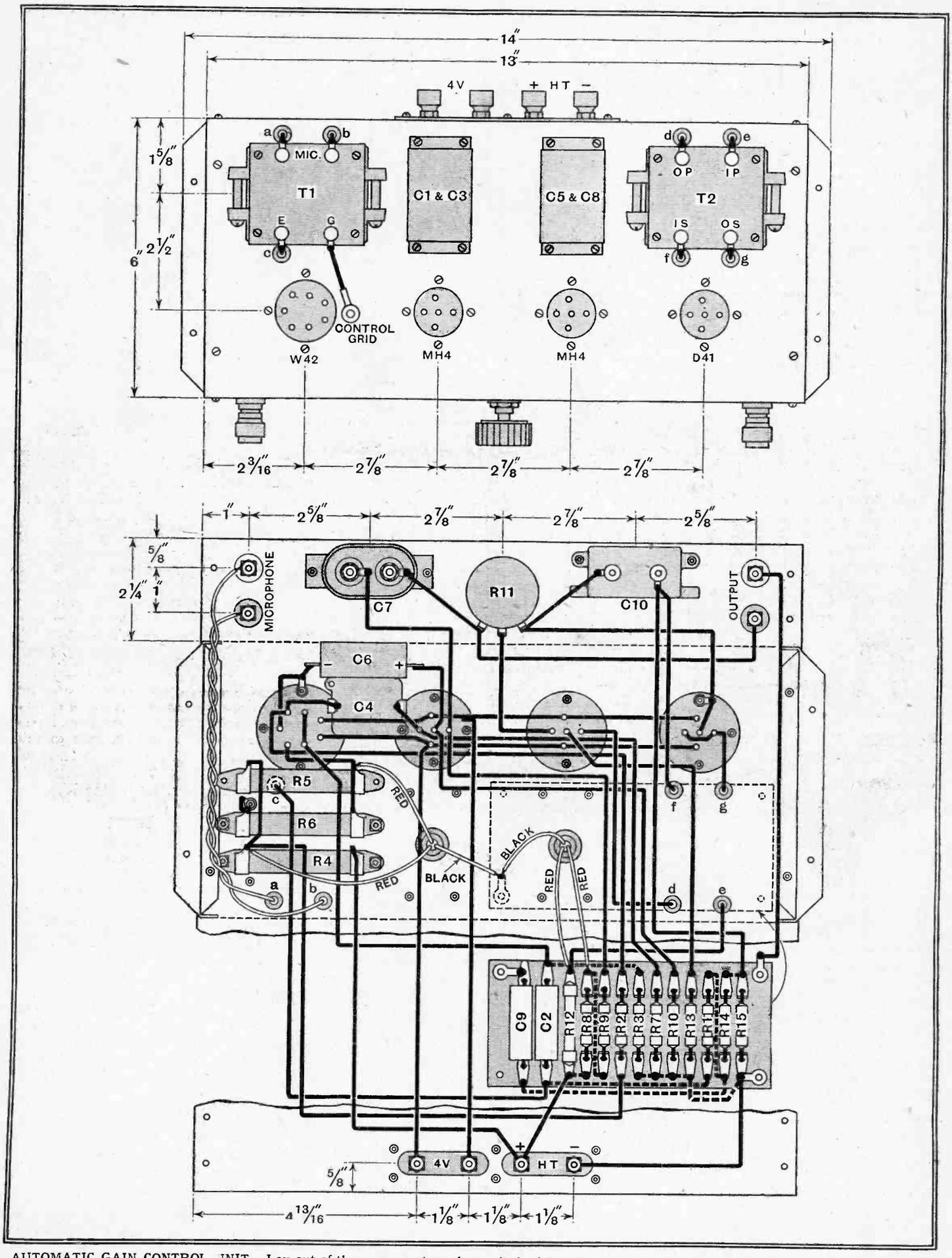

AUTOMATIC GAIN CONTROL UNIT. Lay-out of the components and practical wiring plan. The wiring for the components on the group board is carried out mainly on the reverse side and these connections are shown by dotted lines.

Automatic Gain Control Unit—

ments. The HT consumption is relatively small so that a mains transformer of less than 50 watts input can be used. A 20-henry smoothing choke and two 8 mfds. electrolytic condensers are all that is necessary to complete the power pack.

Assembly and Wiring

It is not proposed to discuss the construction of the unit save to say that the group board with its resistance and tubular condensers should not be placed in position until all the under-chassis assembly and wiring are complete.

The wiring of the group board is carried out on the reverse side, which explains why the majority of the soldering tags seen in the photograph have no visible connections made to them.

Another point that may require clarifying is that, while only two wire-wound strip resistances can be seen in the illustration, actually three are used, but two are assembled on the same fixing screws and mounted one above the other by means of spacing washers or extra nuts. Apart from this the assembly and wiring are quite straight-forward.

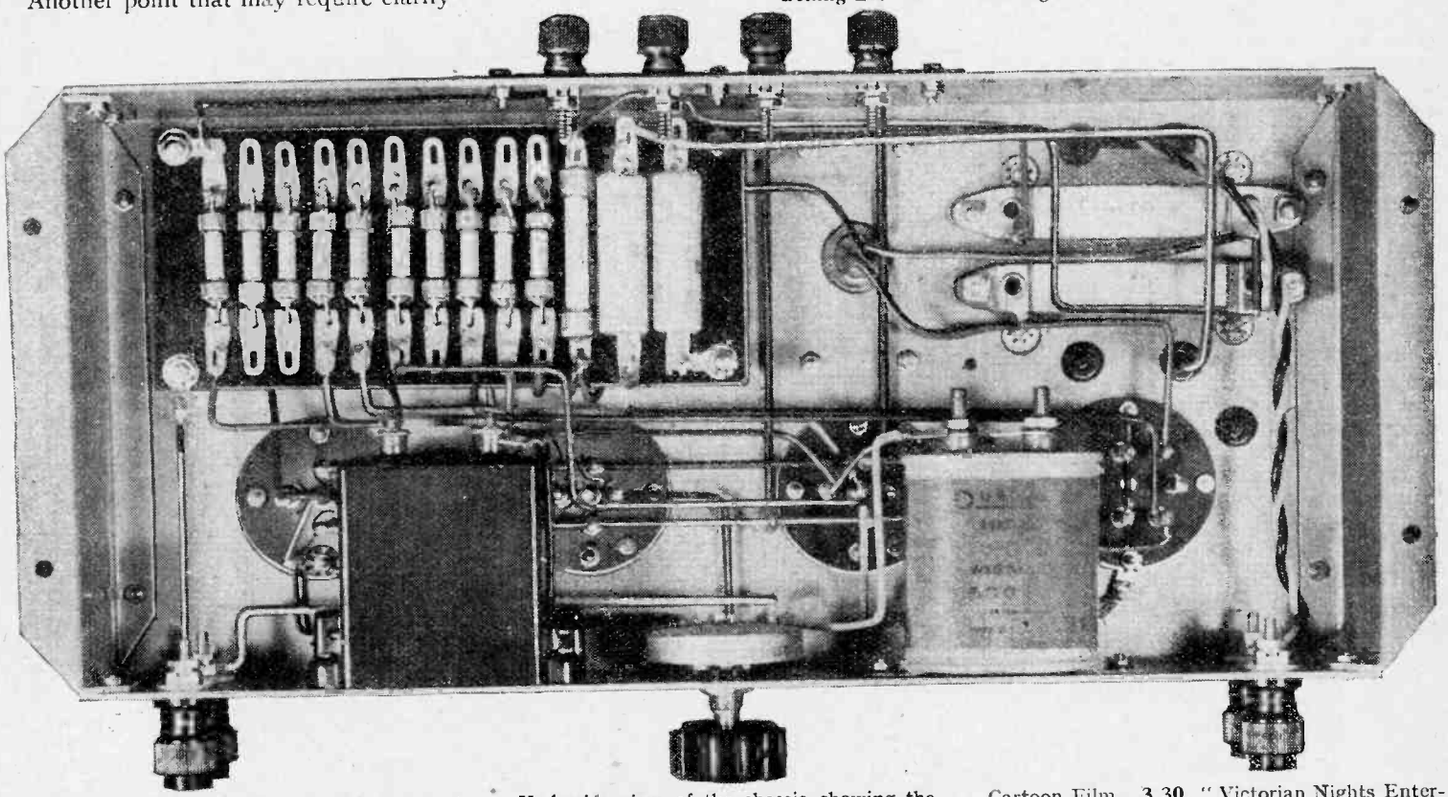

Underside view of the chassis, showing the grouping of resistances and condensers.

LIST OF PARTS

1 Intervalve coupling, ratio 1:1, **T2** — **Haynes Radio CP1**

1 Microphone transformer, ratio 10:1, **T1** — **Haynes Radio TM5**

Condensers:

- 1 0.1 mfd., 1,500 volts working, oil-immersed, **C7** — **Dubilier 950**
- 1 0.02 mfd., 350 volts, mica, **C4** — **Dubilier 680**
- 1 2 mfds., 200 volts, **C10** — **T.C.C. 50**
- 1 25 mfds., 25 volts, electrolytic, **C6** — **T.C.C. "FT"**
- 2 8-8 mfds., 570 volts working, electrolytic, case isolated, **C1, C3, C5, C8** — **Dubilier 3209**
- 2 0.1 mfd., 350 volts, tubular, **C2, C9** — **Polar-N.S.F.**

Resistances:

- 1 350 ohms, ½ watt, **R3** — **Dubilier F½**
- 2 700 ohms, ½ watt, **R10, R13** — **Dubilier F½**
- 1 3,000 ohms, ½ watt, **R2** — **Dubilier F½**
- 1 25,000 ohms, ½ watt, **R8** — **Dubilier F½**
- 2 50,000 ohms, ½ watt, **R1, R9** — **Dubilier F½**
- 2 500,000 ohms, ½ watt, **R7, R14** — **Dubilier F½**
- 1 1 megohm, ½ watt, **R15** — **Dubilier F½**
- 1 25,000 ohms, 1 watt, **R12** — **Dubilier F1**
- 2 3,000 ohms, strip type, **R4, R5** — **Colvern**
- 1 4,000 ohms, strip type, **R6** — **Colvern**

1 Volume control, 0.25 megohm, **R11** — **Dubilier "B"**

3 Valve holders, 5-pin (without terminals) — **Clix Chassis Mounting Standard Type V1**

1 Valve holder, 7-pin (without terminals) — **Clix Chassis Mounting Standard Type V2**

4 Terminals, ebonite shrouded, Mic (2), Output +, Output − — **Belling-Lee "B"**

4 Terminals, HT+, HT−, Heater (2) — **Belling-Lee "F"**

1 Plug-top valve connector — **Belling-Lee 1175**

1 Resistance group board — **Haynes Radio**

Chassis: 13×6×2¼in. — **B.T.S.**

Miscellaneous: — **Peto-Scott**

3 lengths systoflex, small quantity No. 18 tinned copper wire, 7 rubber grommets, etc.

Screws: 42 ¼in. 6BA; 10 ½in. 6BA, all with nuts and washers.

Valves:

2 MH4, 1 D41, 1 W42 — **Osram**

The National Physical Laboratory: Abstracts of Papers Published in the Year 1936. A collection of abstracts of 140 papers published from the N.P.L. in the scientific and technical Press. A number of the papers deal with wireless and allied subjects, such as acoustics. Pp. 64; published by H.M. Stationery Office, Kingsway, London, W.C.2; price 1s.; postage extra.

Television Programmes

THURSDAY, JANUARY 27th.

3, Douglas Byng in "By Way of a Change!" with the Television Orchestra and supporting cast. **3.20**, Gaumont-British News. **3.30**, 115th edition of Picture Page.

9, Repetition of 3 p.m. programme. **9.20**, British Movietonews. **9.30**, 116th edition of Picture Page.

FRIDAY, JANUARY 28th.

3, Making a Gramophone Record, O.B. from His Master's Voice Studios in St. John's Wood.

3.15, Richard Hearne in "Photography." **3.25**, British Movietonews. **3.35**, Comic Strip III: a programme of American humour. **3.55**, Preview.

9, Making a Gramophone Record: O.B. from His Master's Voice Studios in St. John's Wood. **9.20**, "Pyramus and Thisbe" a most lamentable comedy by William Shakespeare. **9.55**, Preview.

SATURDAY, JANUARY 29th.

3, "The Peep Show," Walter Wilkinson. **3.10**, Making a flower border, C. H. Middleton. **3.25**, Cartoon Film. **3.30**, "Victorian Nights Entertainment," a charade without a solution.

9-10.30, "Once in a Lifetime": a repeat performance of the play by Moss Hart and George Kaufman. Cast includes, Joan Miller, Charles Farrell and Guy Glover.

MONDAY, JANUARY 31st.

3, The White Coons. **3.30**, Gaumont-British News. **3.40**, Table tennis commentary. **3.50**, "Pas Seul" No. 2.

9, The White Coons (this programme will be heard by Regional listeners). **9.30**, British Movietonews. **9.40**, Table Tennis Commentary. **9.50**, "Pas Seul" No. 2.

TUESDAY, FEBRUARY 1st.

3, Variety. **3.15**, British Movietonews. **3.25**, Repetition of Friday's 9.20 programme.

9, Starlight. **9.10**, Design 2. **9.20**, Gaumont-British News. **9.30**, "After Supper," An intimate cabaret.

WEDNESDAY, FEBRUARY 2nd.

3, Starlight: Alice Delysia. **3.10**, Talk. **3.20**, Gaumont-British News. **3.30**, Jack Jackson and his Band.

9-10.30, Repetition of Saturday's evening programme.

Readers' Problems

A Selection of Queries dealt with by the Information Bureau, and chosen for their more general interest, is published.

The Best Valve

IN the days when reaction was the principal contributor towards both sensitivity and selectivity of a receiver, much ink was spilt over the question of choosing the best valve for use as a reacting detector. Even now there are occasions when the amplification obtainable so simply and cheaply by means of reaction is valuable, and a querist again raises this old question of the choice of valve, asking whether a type with a very high amplification would give maximum sensitivity.

Smoothness of reaction in such cases is of paramount importance, and a valve of the type proposed does not usually show up very well in this direction. As a general rule a detector valve of not more than 15,000 ohms AC resistance and with a mutual conductance of about 1.5 mA per volt is best. Our querist should not forget that a low HT voltage will be desirable, and that care should be taken in choosing the value of the grid leak and condenser.

Headphones : Safety Measures

SPECIAL precautions against shock should be observed when headphones are connected to a mains-operated receiver; the only really safe way is to employ a double-wound transformer, by means of which the phones are isolated metallically from the HT circuits.

It is for this reason that we are somewhat reluctant to endorse an arrangement proposed by a reader and shown diagrammatically in Fig. 1. Our correspondent

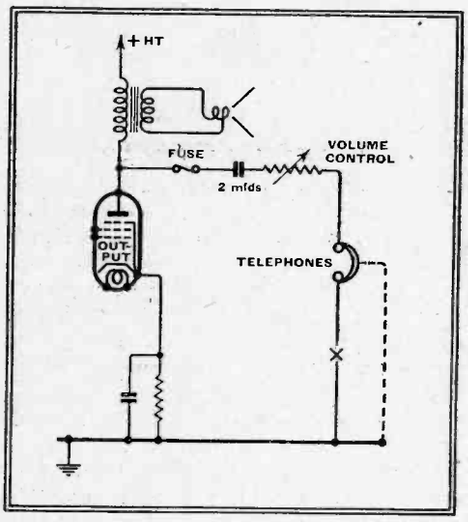

Fig. 1.—Earthing the external metal-work of headphones reduces the risk of shock.

proposes, in the interests of safety, to earth the metal headbands and ear caps of the phones and at the same time to interpose a fuse in the circuit. The idea is that if a short-circuit should develop between the phone winding and the metal work the fuse would blow in the event of a dielectric breakdown in the condenser, which normally isolates the phones from the HT supply.

We can see at least one "snag" in this arrangement. The volume control resistance shown will have to be of quite a high value in order to reduce signal strength to comfortable headphone level, and its value will probably be high enough to prevent any ordinary fuse from blowing, even in the event of a condenser breakdown. It would be better to transfer the volume control resistance to the earthy side of the phones at the position marked X.

By earthing the metal work of his headphones our querist is obviously reducing the risk of shock, but we feel that he would do better to use a transformer.

Displaced Centre Tap

A READER who has been testing a power transformer with the help of an AC voltmeter is somewhat disturbed to find that the voltages across each half of the centre-tapped HT winding differ from each other by between one and two per cent.; he enquires whether the transformer is likely to work satisfactorily when included in a receiver.

Strictly speaking, the voltages across each part should be equal, but a small divergence of the order in question is unlikely to have any harmful results.

High Gain IF Amplifier

MAINLY with the object of attaining exceptionally high selectivity, a reader proposes to build a two-stage IF amplifier. He anticipates some difficulty in maintaining stability, realising that this will be a much more serious problem than in the usual single-stage amplifier. Our advice is asked as to precautions that should be observed.

In the first place, it should be pointed out that stability will be attainable by using an abnormally high negative bias on the grids, but this should not be depended upon solely to stop self-oscillation. Screening should be more than usually complete, and it might be desirable to fit sub-chassis screens between the valve holders. Generous decoupling should be included in the anode, screen and cathode circuits of all valves. After taking these precautions very little excess negative bias should be required to secure stability.

Stray Capacity

THE tuning range (or ratio between minimum and maximum wavelength) of a circuit is determined by the stray capacity existing across the circuit. In this is comprised the minimum capacity of the condenser, the self-capacity of the coil and associated wiring and the input capacity of the valve. This latter is a variable quantity, depending not only on the type of valve, but also on the nature of the impedance in its anode circuit. Thus it is rather difficult to give a definite answer to a reader who asks us to lay down a reasonable value for "lumped" stray capacity across a typical medium-wave circuit. Assuming his question to relate to the grid circuit of a triode valve, the value might lie between a minimum of 30 micro-microfarads (which can seldom be reduced) and a maximum of perhaps 60 m-mfds.

Testing a Gang Condenser

TUNING coils lend themselves fairly easily to adjustment of inductance value for matching purposes; further, modern types are comparatively robust and so need for the rematching of specimens that were originally correctly wound is unlikely to arise. Not so the associated ganged condenser, on which the correctness of alignment of the signal-frequency circuits of a set equally depends; outside the maker's factory there are very few people who can make the necessary adjustment. Further, a condenser is fragile, and rough handling is likely to cause misalignment between the various sections.

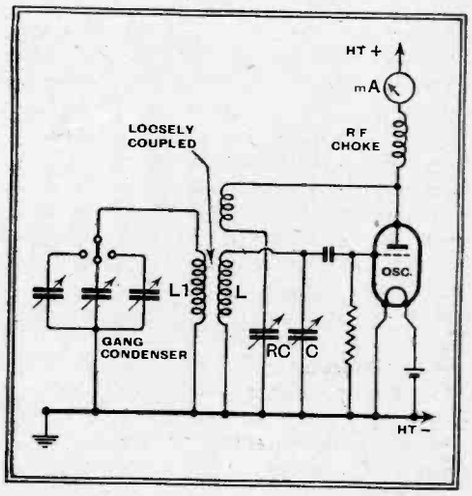

Fig. 2.—A simple set-up for testing the matching of gang condenser sections.

A reader who suspects that, as the result of an accident, his three-gang condenser has become misaligned, asks us if it is possible to test the sections with the help of components likely to be found in the "junk box."

We suggest the set-up shown in Fig. 2, which employs the absorption principle. The oscillator coil L, with its associated reaction winding, may be of the type used in an old RF set, while another of the coils from the same set may be used for L1 in the absorbing circuit. The oscillator tuning condenser C should preferably be of about the same capacity as a single section of the gang condenser under test.

The procedure is to set the oscillator working at a low wavelength and then to note the point of resonance of the absorbing circuit when tuned by one of the gang condenser sections; this point, provided coupling is loose, will be indicated very precisely by a small deflection of the anode milliammeter. This deflection should then occur at exactly the same setting of the gang condenser (as indicated by its dial) when the other sections are used in turn for tuning the absorbing circuit. The process is repeated at three or four different wavelengths. If desired, more accurate comparison may be made by leaving the tuning of the absorbing circuit fixed and using the indications of a "vernier" condenser across the oscillator capacity.

UNBIASED

By FREE GRID

An Unfortunate Omission

WE still keep on hearing a whole lot of talk about the proposed legislation to deal with the question of interference, and yet nothing seems to be done about it. In this connection I do think that we should be well advised to take a leaf out of the book of certain foreign countries, where they do these things very differently. In France, for instance, it is only necessary for you to make a complaint and the full resources of the law are at once put to work on your behalf to track down and eradicate it.

I had very convincing proof of the efficiency of French Government authorities in attending to citizens' complaints when I was in Nice recently, snatching forty-eight hours respite from my labours on behalf of you wireless enthusiasts. Needless to say I took my wireless set with me in order to be able to keep in touch with affairs, but, unfortunately, listening was simply impossible on account of strong interference. I sat down immediately and indited a desperate S O S to *M. le Maire,* who appears to be the official in French cities who is responsible for nearly everything. For a moment I was stuck for the French phrase for man-made static, but reference to the little pocket Anglo-foreign directory of technical terms which I always carry about with me speedily gave me the word "*parasite.*"

The response to my SOS was gratifyingly quick. In fact it could not have been quicker had I been a sinking ship with half a dozen fast destroyers just over the horizon picking up my distress call. I had hardly got back from the Town Hall, whither I had taken my letter in person, when a fast car drew up and out tumbled half a dozen officials. My French was far too weak for me to understand what they were talking about, and I therefore merely motioned with my hands to indicate that they had the free run of my apartments.

Anti-interference squad at work.

From the first their actions puzzled me, as the only interference - detecting apparatus which they appeared to have brought with them were several fairly large magnifying glasses. It was not, however, until one of them started looking through the coverings of my humble couch, using his magnifying glass, that I tumbled to what they were doing. I found afterwards that my complaint had been passed by *M. le Maire* to the Public Health instead of the Radio Department. Apparently I should have qualified the word "*parasite*" by the adjective "*electrique,*" or something like that. A little knowledge of French, as of anything else, appears to be a dangerous thing. Needless to say I have made a bonfire of my so-called technical dictionary.

Readers Defend Manufacturers

SEVERAL of you have written taking me to task for my recent remarks about the policy of our mutual friends the wireless manufacturers in the matter of radio-gramophones. In my recent remarks I pointed out that radiograms were nearly always the most expensive articles which wireless set makers sold, whereas they ought to be somewhere at the other end of the price scale. The reason is that it is the poor man who wants the solace of gramophone records at times when the broadcasting programmes are rather worse than usual, because, unlike the rich man, he cannot afford to clear off to night clubs and such-like expensive places of amusement.

I have been accused of having overlooked the new "Record Player" produced by H.M.V. and the past efforts of others to cater for the poor man by producing an inexpensive "playing desk" which he can add to his existing set. In writing what I did I was not unmindful of the existence of these, but what of the poor man whose old set has just died of senile decay and who wants to replace it by a radio-gramophone?

He can, of course, get a good set for as little as eight guineas or so and buy one of these desks with it, and still have some change left out of twelve guineas. Is it asking too much, however, to hope for manufacturers to supply him with both set and desk in one cabinet at a slightly greater price, thus putting him on a par with his richer brethren? As I said originally, the reason why radio-gramophones are so expensive is that manufacturers will insist on selling them in conjunction with the most expensive wireless chassis they produce. In my opinion there appears to be no reason why they could not turn out, in addition, a cheap but good radio-gramophone by employing one of their inexpensive "popular" chassis as a basis for its design, leaving the separate playing desk for the man who already possesses a set and wants to convert it to a radio-gramophone at minimum cost.

Yet another point—and perhaps the most important one of all—is that my critics keep discreetly silent about automatic record-changers. As I said before, the most prolific users of wireless are women who—Heaven knows why!—like to let the set drool away all day to the accompaniment of whatever they are doing. They would be glad at times to have a half-hour's programme of their own choosing instead of relying on the B.B.C.'s efforts, but they don't want to leave off what they are doing in order to change the record every three or four minutes.

Knock up your own cabinet.

I am quite aware, of course, that a separate record-changer by a first-class maker may be had for as little as £7 10s., but who wants to be bothered to knock up a cabinet to hold it? Cannot we have an automatic playing desk at little more than this price, and preferably one that tackles the popular 9 inch as well as the 10 and 12 inch sizes?

A Grave Misunderstanding

I AM sorry to say that quite a number of you put a very wrong construction on the New Year's wishes with which I recently greeted you. Some of you have written to tell me that CH_3OH, of which I wished you an amount sufficient for bodily warmth, was wood alcohol and by no means fit for human consumption. Needless to say, it grieves me very much indeed that you should think that I, of all people, should be seeking to lead you into the drinking habit, which is, I am sorry to say, one of the strongest temptations which beset the path of the keen wireless man owing to his custom of sitting up late at night in solitary state in order to listen to evening programmes from America. It should hardly be necessary for me to say that the method of achieving bodily warmth from wood alcohol which I had in mind is to burn it in the little spirit stoves which so many of you install in your wireless dens to warm the place up on these bitter winter nights.

NEWS OF

SUN-SPOT ACTIVITY

North American Fade-out

SHORT-WAVE listeners who experienced unusually bad reception of the U.S.A. stations last week may be interested to learn that conditions were quite abnormal at this period.

A large group of sun-spots was observed at the beginning of last week, and its effect on upper atmosphere ionisation was so far the most marked of the present cycle.

A report of extremely bad fade-outs of North American signals on January 16th and 17th has been received from a short-wave experimenter in Great Clacton, who states that signals from other directions were, however, not affected to anything like the same degree. Presumably this relates to reception from a southerly part of the hemisphere, where the propagation path has been well clear of the Polar regions.

From information imparted to him by an American amateur even wire telephone circuits were affected in the U.S.A., and this was presumably brought about by the magnetic storms that often accompany severe eruptions on the sun.

GOOD RECEPTION IN SCHOOL

Extension Loud Speakers Recommended

IN the latest booklet issued by the Central Council for School Broadcasting, extension loud speakers are strongly recommended for school use. Many of the sets described in the list have built-in speakers, but the Council is of the opinion that the needs of scholars can only be met by careful placing of loud speakers in different parts of the classroom. For this reason, a majority of the recommended sets have outputs of 6 watts and over.

All tests of apparatus for school use are carried out with the controls, e.g., tone controls, variable selectivity controls, etc., so adjusted as to provide the optimum *quality* of reproduction. In fact, the Council considers that expenditure of time and money on school broadcasting can be justified only where the voice as reproduced approximates to that of a speaker in a classroom.

The use of the school hall for broadcast lessons is strongly deprecated, unless the hall is of very moderate size. If only one or two classes are present in a large hall, acoustic difficulties are likely to prejudice good reception.

DAVENTRY'S LOUDER VOICE

Two New Transmitters Ordered

IT was announced last week that the B.B.C. has placed contracts for two further high-power short-wave transmitters for the Empire station at Daventry, and that the extension of the existing building to house the plant was already in hand.

These contracts, it is understood, have been placed with Marconi's Wireless Telegraph Company. On enquiring at the M.W.T. head office, however, we were informed that on no account could they give any information, as when under contract to the B.B.C. they were forbidden to disclose details of the work to be undertaken. It has, however, been stated in one of the national dailies that these new transmitters will probably be capable of using 100 kW. If this is true, these transmitters will be as powerful as any SW stations so far projected by other countries.

These developments at Daventry are necessary to avoid the curtailment of Empire transmissions by the forthcoming extension of foreign language broadcasts.

TELEVISING THE DERBY

FROM the technical point of view there is good reason to hope that a television transmission of the Derby would prove successful. The Local Authority has now been approached and asked to allow space for the mobile equipment vans. If this be granted it will still be necessary to apply to the Epsom Grand Stand Association for permission to televise the race.

ACOUSTIC PROBLEMS

Catering for the Invisible Audience in Opera Broadcasts

THE next stile for the Music Productions Unit of the B.B.C. to surmount will be Smetana's "The Bartered Bride," which is to be heard on February 18th (National) and 22nd (Regional). The use of St. George's Hall for these full opera productions has called for new ideas on acoustics. The presence of even a small audience introduces too much absorption; while, with an empty auditorium and the introduction of additional reflecting surfaces, a bright and realistic "theatre" acoustic is obtained. Tests have revealed that, with an audience in the auditorium, "dead studio" effects are obtained. The decision, therefore, is against a visible audience.

Another element which tells against the presence of an audience is that the layout of orchestra, principals and chorus is arranged with an utter disregard of the auditorium, the microphones merely picking up the requisite musical balance at the correct intensity for broadcasting. To a listener in the hall, therefore, the volume of sound would seem small, and much of the vocalists' diction would be lost.

Multi-microphone Technique

For full opera broadcasts the technical producer will control seven microphones by means of a mixing unit. Beside him will sit a musical assistant, following the score and giving fixed cues for alterations in the microphone mixture. Not more than two microphones take direct sound simultaneously, and under certain conditions the blend of orchestra and singers will be taken on one only.

At varying distances and heights, microphones are suspended in front of the singers. By varying the multi-microphone mixture, an impression of an unusually wide dynamic range can be given. Alteration in perspective and even in acoustics can be suggested by exploiting this technique. And reverberation can be added by the use of an "atmosphere" microphone, so placed that it cannot pick up direct orchestral or vocal frequencies.

WHITHER TELEVISION ?

CAPTAIN ARTHUR EVANS, Unionist M.P. for Cardiff South, asked the Postmaster-General, in the House of Commons on December 22nd, what reasons he could assign for the public response to television not being up to the standard expected. That question will be answered in the House of Commons on Tuesday next, February 1st, and in the evening National listeners will hear from Mr. Gerald Cock, B.B.C. Director of Television, something about what has been happening during the past 18 months and what can be expected in the future.

It is understood that the next development in B.B.C. television will be transmissions for an hour on Sunday afternoons. By transmitting during daylight, it will be possible to use the mobile television unit for actuality features, such as "Around the London Parks" and "Famous Thames Locks." Hundreds of other outdoor features will suggest themselves, and it seems likely that the Sunday O.B.s may be among the most popular features.

Sunday transmissions are expected to begin in April.

"HERE IS AN SOS"

The Year's Messages Analysed

IT is noteworthy that through the co-operation of listeners just over half (50.79 per cent.) of the total of 1,213 S O S and police messages broadcast by the B.B.C. during last year were successful.

The biggest of the four general sections into which these are divided was again that for relatives of persons dangerously ill, and of the 823 appeals, 472 (57.36 per cent.) are known to have been successful. That the proportion of successes is so large is the more remarkable when it is realised that these broadcasts are made only when all other means of communication have failed.

Analysis of the results in the remaining three sections does not show such a high percentage of successes. Of the 318 appeals for witnesses of accidents, 121 (38.05 per cent.) were answered. Broadcast messages designed to assist the police in the investigation of crime totalled 26, of which 6 (23.08 per cent.) are known to have been successful. Of the 46 "special" police messages, 17 (39.96 per cent.) met with success.

SUPPRESSING INTERFERENCE

"IF a listener with a reasonably good outdoor aerial and a reasonably screened receiver, or a receiver fitted with a mains lead suppressor, cannot receive a station with a field strength of 1 millivolt per metre with radio interference sounding no louder than needle scratch, then he has cause for complaint that there is unsuppressed machinery in the neighbourhood (these remarks apply only to medium and long waves)."

This paragraph, taken from a

THE WEEK

statement issued by Belling and Lee, the well-known anti-interference specialists, represents an attempt to forecast in simple terms the conditions that should result from general application of the degree of interference suppression provided for in the recently published British Standard Specification, commented upon editorially last week and reviewed elsewhere in this issue. As a rough guide to signal strength, stations such as Kalundborg and North Regional provide a field strength of about 1 millivolt per metre in the London area.

LISTENERS' LOSS

THE passing of A. W. Hanson is now known and deplored by English listeners in all parts of the Empire, and *The Wireless World* takes this, the first opportunity, to register its deep regret at so tragic an end.

He will be remembered for that which was his greatest achievement, the production of "In Town To-night."

WIRELESS "OLD-TIMERS" DINNER

AN event of unusual interest in the history of amateur radio took place last Saturday (January 22nd), when the Radio Society of Great Britain held a dinner in London as an occasion for a reunion of present and past members of the Society of ten years' standing. Guests included Sir Ian Fraser, Mr. Leslie McMichael, Mr. Rene Klein (founder of the Society), Mr. P. R. Coursey, and Mr. H. S. Pocock. Mr. Gerald Marcuse took the chair, and several Past Presidents attended.

FROM ALL QUARTERS

New Dutch Station

A NEW medium-wave station is to be built for the Netherlands Broadcasting Association at Jaarsveld. Working at 120 kW, it will replace the present temporary transmitter on 415.4 metres.

Will the Truth Out?

ALTHOUGH Japan transmits short-wave propaganda, the use of short-wave receiving sets by her citizens, and even by Americans living in the country, is, it is reported, prohibited.

Japan on 150 kW

AT present Japan has seven 10-kW stations and 20 3-kW stations. A new 150-kW transmitter is shortly to be opened as well as three 3-kW short-wave stations.

Reports Wanted

THE Swiss broadcasting authorities ask for reports of reception of the experimental transmissions from Radio-Nations which will be given on the first Sunday of each month, beginning with February 6th. The schedule will be:

10 a.m. C.E.T. from HBJ (20.64 metres) and HBO (26.31 metres) for Australia, India, Philippines, and Iraq.
1 p.m. C.E.T. from HBH (16.23 metres) and HBO for Japan and China.
6 p.m. C.E.T. from HBO for Egypt and South Africa and HBP (38.48 metres) for Morocco and Algiers.

World's Smallest Transmitter?

THIS claim is put forward by the N.B.C. for the minute transmitter it has presented to Jules Charbneau, who owns a museum which contains over 25,000 miniature objects. The transmitter, which is housed in a 3-inch cube and weighs less than 1lb., uses a wavelength of 1 metre and has a power of 1/10th watt. Its transmissions were successfully received in New York over a distance of over four miles.

Australian Propaganda

GOVERNMENT authorities at Canberra are discussing ways and means of establishing a short-wave station which would transmit authoritative news to the world. Such a station would be operated in conjunction with the Ministry for External Affairs and would be a valuable aid in Australia's campaign for extending her export trade.

Wireless in the Arctic

PROFESSOR E. V. APPLETON, in a recent lecture to the Ely Literary Society, described some of his Polar investigations of 1932-33, which led to the explanation of the peculiar behaviour of wireless waves travelling over the North Pole and the effect on them of sun-spots.

Lifeboat Wireless

EXPERIMENTS have recently been carried out in an endeavour to find a suitable wireless installation for the Plymouth lifeboat for, owing to the nature of the coastline and the hills, it has always been difficult to establish satisfactory communication from the boat to the shore.

Andorra Transmitter

THE Republic of Andorra, the small State in the Pyrenees which has a population of under 6,000, is contemplating the construction of a 60-kW transmitter. Expenses for the erection and maintenance of the station will be derived from advertising programmes which it is proposed to transmit.

Really Short

ACCORDING to the Italian paper *Radiocorriere* Professor Esau, of Jena, has successfully generated a wavelength of 4.9 mm., which is claimed to be the "shortest ever."

B.B.C. Audiences

NEARLY 12,000 people are waiting for their turn to go to see a free show either in St. George's Hall or in the Concert Hall, Broadcasting House, and applications continue to arrive at the rate of about 10,000 a year. Those at the end of the present list must wait until the autumn for their turn.

N.B.C. Relays

LAST year the N.B.C. relayed more than 550 programmes emanating from foreign countries, and of these England supplied 172.

Belfast's Roof Promenade

THE B.B.C. is now awaiting the Belfast City Surveyor's approval of plans for the new Broadcasting House, referred to last week. The building will be nearly 80 feet high, with a curved façade and a balcony over the entrance. An interesting feature will be a roof promenade where staff and artistes will be able to take open-air exercise between rehearsals.

Theatre Broadcasts

A NEW understanding between the B.B.C. and Mr. George Black, director of the most important chain of variety theatres in the country, removes the antagonistic attitude of music-hall managements towards broadcasts by stage artistes.

New French Station

THE new French national transmitter, which is in the course of construction about twelve miles from Bourges, will be ready next May and will use the wavelength of 1,648 metres now used by Radio-Paris, the present national transmitter which it is replacing.

Australian SW Schedule

THE transmission schedule for February of the experimental short-wave stations of Amalgamated Wireless of Australasia is as follows:—

Sydney, VK2ME (31.28 metres, 20 kW): Sundays, 6 to 8 a.m. and 10 a.m. to 2 p.m.; and Mondays, 2 to 4 p.m.
Melbourne, VK3ME (31.55 metres, 1.5 kW): Mondays to Saturdays, 9 a.m. to noon.
Perth, VK6ME (31.28 metres): Mondays to Saturday, 9 to 11 a.m.

Forthcoming Events

I.E.E. WIRELESS SECTION meeting, Wednesday, February 2nd, at 6 p.m., "A Resonance Bridge for use at Frequencies up to 10 Mc/s," by Professor Fortescue, O.B.E., M.A., and G. Mole, Ph.D., B.Sc.

I.E.E. Ordinary Meeting, Thursday, February 3rd, at 6 p.m., "The Moving Coil Voltage Regulator," by E. T. Norris.

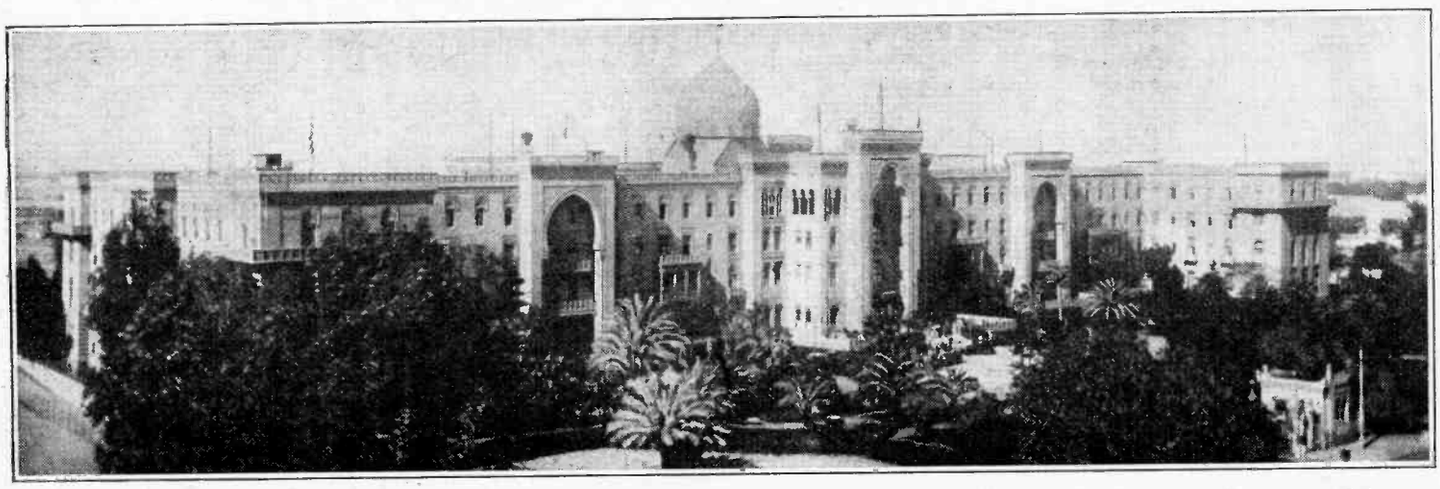

THE HELIOPOLIS PALACE HOTEL provides the idyllic setting for the International Telecommunications Conference which opens at Cairo on February 1st, and may last more than six weeks. It will bring together from five to six hundred delegates from all parts of the world in discussions which are to cover every field of electrical communication. Probably the most delicate situation will arise over the allocation of wavelengths, for the solving of this problem does not only touch the technical side but involves the prestige of the countries concerned.

Random Radiations

By "DIALLIST"

Interference Standards

FOR a long time I have urged that those who are interested in wireless should refuse to buy domestic electrical appliances unless these are guaranteed to be incapable of radiating interference with radio reception. Though willing to do their bit, manufacturers have been handicapped in that hitherto there has been no accepted standard of what constitutes interference. Such a standard has now been adopted by the British Standards Institution, which has been working in conjunction with the G.P.O. and the B.B.C. There is to be a special mark on all apparatus which complies with the standard. This is all to the good, but it's a pity that the standard is concerned only with interference on wavelengths between 200 and 1,500 metres (1,500 to 200 kilocycles); nothing at all is said about the short waves or the ultra-shorts. My own view being that not so very many years from now the ultra-shorts will be the most important wavelengths of all for broadcasting purposes—sound as well as vision—I hold most strongly that we should use every effort now to clear them of interference and to keep them clear.

Button-tuned Sets

TO the bigger sets incorporating press-button or touch-button tuning, the first of which is just making its appearance, I extend a warm welcome, since they must lead to some much needed improvements in general technique. To begin with, the problem of the creeping oscillator will have to be thoroughly tackled by manufacturers. How strongly creeping is in evidence in some sets was shown in a recent article in *The Wireless World** and my own experience fully bears out everything that its writer said. If a press-button set is to be satisfactory, not only automatic tuning correction but also a pretty stable oscillator is essential. Were the oscillator to creep as badly as some that I have come across, automatic tuning correction might be unable to pull the set back into line. Unfortunately, if the press-button set catches on, we are almost bound to have a spate of cheap sets incorporating it and containing neither automatic tuning correction nor stabilising devices for the oscillator. That portion of the public which still believes that you can get something for nothing—or perhaps I should say a great deal for next to nothing—will buy them and it will have the same unhappy experiences as it had when it rushed for the cheap-jack "all-wave" receiver, which was too often just a two-band set with short-wave coils hastily added to it.

* Tuning Drift, by E. L. Gardiner, B.Sc., *The Wireless World*, Jan., 6, 1938.

Why Is It So Common?

Of those who write to me, as not a few do, about faults in receiving sets, by far the greatest number tell a story something like this: "When I switch on my set reception is excellent for perhaps twenty minutes. Then it goes all muzzy. If I switch off the set and leave it for some minutes it comes all right again for a time, but presently it is as bad as ever." The only variations on the theme are the length of time which elapses after switching on before the trouble sets in and the actual form that it takes. Sometimes signals disappear altogether; sometimes, again, an outburst of crackling is heard. There are several possible causes for such troubles—a defective valve, a break in the windings of a low-frequency inter-valve or output transformer, a faulty condenser. It is when the set reaches a certain temperature whilst warming up that they become manifest.

Better Cooling Needed

There is no question that some modern sets do run pretty hot, a fact which is largely responsible not only for the breakdowns in question, but also for tuning drift. One wonders whether it wouldn't be advisable to pay more attention to the question of cooling, for a set which literally warms to its work can put some of its parts under a pretty severe strain. Take those queer breakdowns in AF inter-valve transformers, of which I have come across a good many. It is perhaps more often than not the secondary winding which gives way and this, except possibly in transformers coupling the driver to a Class "B" valve, is under no electrical strain worth talking about since it carries no current and the potential difference between the terminals is comparatively small. What I believe happens is that as the metal core and the windings themselves expand under the influence of heat, the physical strain causes the fine wire to break—probably in some extra tight turn. This explains muzziness (oscillating potentials delivered to grid by capacity, but grid biasing voltage absent), crackles (an intermittent contact between the broken ends) and the complete fade-out of signals (the broken ends draw farther and farther apart as the temperature increases).

This Beats Me

HERE, I think, is the queerest fault that I have ever come across in a good many years of radio experience. I haven't been able to investigate it on the spot, but here are the facts as given to me. The AC mains set responsible for the trouble is used in a small house, whose living rooms consist of a kitchen and a parlour, the set itself being in the latter. Normally it performs well, bringing in a considerable number of stations. But whenever the kitchen cold water tap is turned on the station to which the set is tuned, no matter what it may be, just fades right out. You will say at once that it's an obvious instance of the wrong kind of water-pipe earth. That's just what I did; but on making further enquiries I found that there wasn't any kind of water-pipe earth in use. Actually, the earth connection is made by means of a copper tube driven into heavy soil. Nor is there an in-

Broadcast Programmes

FEATURES OF THE WEEK

THURSDAY, JANUARY 27th.

Nat., 6.20, "Men Talking about Canada." 7.30, Hill Billy Variety. 9.20, Marcel Dupré at the Concert Hall Organ.

Reg., 6, Star Gazing—VII, the Radio-biography of W. H. Berry. 8.50, Ambrose and his Orchestra. 9.40, Table Tennis commentary.

Abroad.

Brussels I, 8, Modern Music Symphony Concert.

Rome No. 1, 8, "La Traviata": Verdi's opera from the San Carlo, Naples.

FRIDAY, JANUARY 28th.

Nat., 6.25, George Formby. 8, The Kentucky Minstrels. 9.20, "Efficiency and Liberty": Percy Phillip talks on France.

Reg., 7.30, Variety from Stockport. 9, Snooker Commentary: Davis *v.* Lindrum. 9.20, "I Remember," musical presentation by Percy Edgar.

Abroad.

Frankfurt, 7, Wagner Concert.

Athlone, 8.40, The Foreign Situation: talk by Donal O'Sullivan.

SATURDAY, JANUARY 29th.

Nat., 8, Music Hall, including the Viennese Singing Sisters and Clapham and Dwyer. 9.20, "American Commentary," from New York. 10.45, Studies of Childhood and Adolescence selected from the Russian masters.

Reg., 8, The Moskowsky Quartet. 9, Eddie Souh and his Orchestra, from Paris. 9.30, Commentary on the final of Table Tennis World Championship.

Abroad.

Prague, 7, "The Vagabond King": operetta.

Bordeaux-Lafayette, 8.30, "The Merry Widow."

SUNDAY, JANUARY 30th.

Nat., 6.30, The Richard Crean Orchestra. 7.15, "Piccadilly": feature programme. 9.35, "City of Music"—potpourri of Viennese music.

Reg., 5, "Spelling Bee," transatlantic feature. 9.35, "Nicholas Nickleby."

Abroad.

Saarbrücken, 2.30, Report on the Schmeling-Ben Foord boxing match.

Rennes, 7 "The Rhinegold" (Wagner) from Berlin.

MONDAY, JANUARY 31st.

Nat., 6.20, Bach pianoforte recital by James Ching. 8, Talk, The Film Actor's Job. 9.35, Sir Adrian Boult conducts the B.B.C. Orchestra (E).

Reg., 6.40, Phyllis Scott and John Rorke, songs at the piano. 8, Bob Crosby and his Orchestra, from America. 9, Relay from the television studios—The White Coons.

Abroad.

Rome Group, 8, "The Rhinegold" from the Royal Opera House, Rome.

Frankfurt, 8.15, Schubert concert.

TUESDAY, FEBRUARY 1st.

Nat., 7, Chopin recital by Orloff, pianoforte. 8, Variety from the Holborn Empire. 8.30, Dance Music. 9.20, "How I Began."

Reg., 6.30, The Manchester Gentlemen's Glee Club. 7.50, From Berlin, Act II of the "Merry Wives of Windsor." 9.20, B.B.C. Ballroom.

Abroad.

Stuttgart, 8, "1709 in Rome"—music of Handel and Scarletti.

Luxembourg, 8.45, "Carmen."

WEDNESDAY, FEBRUARY 2nd.

Nat., 7, "The Rebel Maid": a romantic light opera. 8, "Mr. Micawber." 8.15 and 9.20, B.B.C. Symphony Orchestra conducted by Sir Hamilton Harty.

Reg., 7.30, "The World Goes By." 8.15, A Tour of the Hebrides with Samuel Johnson. 9.40 Police Boxing at the Albert Hall.

Abroad.

Rome Group, 8, "The Valkyrie."

Warsaw, 9, Chopin recital by H. Sztompka, pianoforte.

door aerial. The collector is a reasonably efficient outdoor wire. I admit without further parley that this has me completely whacked. The only thing I can think of is that the lighting supply may be earthed to the water supply mains—a not uncommon practice in some districts—in some way not according to Cocker. But were that so one would expect the lights to grow dim and fuses to blow when the tap was turned on. Has anyone come across anything of this kind?

The WLW Question

TWO readers—to whom my best thanks—have been good enough to send me explanations of failure to receive the 500-kilowatt WLW at times when smaller medium-wave stations are roaring in. As the explanations are quite different, I'll give them both, so that you may take your choice. Reader No. 1 tells me that he has it from a friend in Kansas City that WLW's much-vaunted 500 kilowatts are reserved for daylight hours only, the power after dark being but 50 kilowatts. Reader No. 2 reports that as the result of complaints from the Canadian Government WLW now uses an aerial of the "suppressor" type to reduce radiation into Canadian territory. It is only reasonable, he adds, to assume that this aerial will reduce the strength of signals along the great-circle route to this country. Neither of these explanations seems to show why it is that WLW is sometimes received well a little before sunrise during the darker months of the year.

Two Queer "Effects"

A READER who lives in Jersey sends me an account of two out-of-the-way effects that he has noticed for some time on the long waves. He receives the Welsh Regional (373.1 metres) very strongly on 750 metres—"loudly enough to fill a small room"—and hears it also as a background to Droitwich. When one comes across reception oddities of this kind one's first thought is that they may be freaks caused by one or other of the beats that are apt to occur in superhets. But any such idea is ruled out here, for my correspondent has two sets (a *Wireless World* "Monodial" superhet and a good, straight receiver) with both of which these things occur. Neither was observed until the Washford Cross station went up to 70 kilowatts, but I can hardly believe that break-through from a station in the north of Somersetshire could be experienced in a locality so far away as Jersey, the distance between the two places being 150 miles or more. Nor, again, would one expect break-through of a 373.1-metre station on a wavelength as low as 750 metres. The London National and the London Regional, which are the stations liable to cause break-through in my locality, have wavelengths of 261.1 and 342.1 metres respectively, and, if they do break through, they are usually heard somewhere between 800 and 900 metres.

Explanation Wanted

My correspondent suspected that the phenomenon might be due to a "sub-harmonic" of the Welsh Regional, since 373.1×2 metres $= 746.2$, and $373.1 \times 4 = 1{,}492.4$, which is pretty close to the 1,500-metre wavelength of Droitwich. He wrote to the B.B.C., who replied that they had never heard of a case of sub-harmonic reception of the Welsh Regional, adding that on the question of the existence of sub-harmonics opinions were strongly divided. Clearly as puzzled as my correspondent himself, they suggested tentatively that some form of "reverse Luxembourg Effect" might be responsible, though they had received no other reports of this. I cannot see that anything of the kind can be occurring, for Washford Cross is some 50 miles west of a straight line joining Droitwich and Jersey. Whatever the cause may be, it must be due to something outside the receiving sets, for my correspondent reports that he has experimented with receivers belonging to friends and has usually found the Washford Cross background to Droitwich present as well as strong reception of the Welsh programme on any set that would tune up to or down to 750 metres. Can any reader offer an explanation? I certainly cannot.

Interference-free Electrical Appliances

Qualifications for the "National Mark"

IN last week's issue we commented editorially on the publication of a British Standard Specification* defining permissible limits for interference-producing voltages generated by electrical appliances and machines. The specification, prepared by a committee of representatives of many official and semi-official bodies and associations of interested manufacturers, is, it is thought, likely to pave the way for anti-interference legislation.

The new specification requires that measurements of interference shall be made in the manner described in British Standard Specification No. 727, which has already been reviewed in these pages; details of suppressive devices for connection to appliances were given in B.S.S.613.

According to Clause 2 (*a*), which applies particularly to machines and appliances suitable for connection to public supply mains not exceeding 500 volts, the magnitude of the asymmetrical and of the symmetrical components of the interference-producing voltages shall not exceed 500 microvolts at any frequency between 200 and 1,500 kc/s.

In cases where it is necessary to measure the field strength of an interference-producing field, Clause 2 (*b*) stipulates that the field strength shall normally be measured at a point not more than ten yards from the nearest point of the appliance; the maximum voltage gradient so measured shall not exceed 100 microvolts per metre, again at frequencies between 200 and 1,500 kc/s.

After laying down rules for measurement by both methods, the specification goes on to prescribe limits for the duration and "frequency of occurrence" of the interference. Finally, the use of a standard "mark" indicating that an appliance complies with the specification will be permitted to manufacturers who have obtained the necessary licence.

In Appendix A the question of signal/interference ratio is discussed, while Appendix B enumerates the factors on which depend the fixing of permissible magnitude of interference-producing voltages.

Separate specifications relating to trolley buses, tramways, electric lifts and signs, ignition systems and electro-medical appliances are in course of preparation.

* B.S.S. No. 800: pp. 12; price 2/-. The British Standard Institution, 28, Victoria Street, London, S.W.1.

McCARTHY

6-valve all-wave Superhet with Radio Frequency Stage

8 stages.
8 tuned circuits.
3 wavebands.

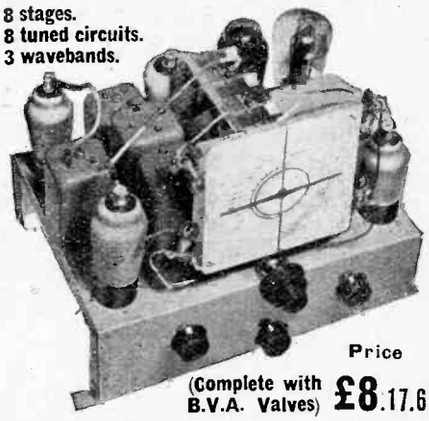

Price (Complete with B.V.A. Valves) £8.17.6

Performance (made possible by use of multi-electrode valves) equal to that of many receivers employing 8 valves or more. Brief specification includes: Large "Airplane" dial, with different coloured lights automatically switched on for each wave-range. Micro-vernier 2-speed drive. 4-point wave-change and gramophone switch. Volume control and variable tone control also operative on gramophone. Reinforced heavy-gauge steel chassis. Covers 19–2,000 metres.
Circuit comprises Preselector circuit, radio frequency amplifier (operative on all 3 wavebands), triode-hexode frequency changer, double band-pass I.F.T. coupled I.F. amplifier, double diode-triode detector and L.F. amplifier. D.A.V.C. applied to 3 preceding valves. 3-watt pentode output.

9 VALVE FOUR-WAVE SUPERHET DE LUXE

14 GNS.

(Complete with 9 B.V.A. Valves)

4 wavebands: 12.8-33, 29-80, 190-550, 800-2,000 metres. Illuminated dial with principal station names.

Controls.—A feature of the receiver is the number of independent controls fitted, making it extremely interesting to operate. These include sensitivity control (varying bias on R/F stage), or Q.A.V.C. with manual muting control for inter-station noise suppression. 5 position wave-change and gramophone switch. Progressive variable tone contro operative on radio and gram.

Circuit in Brief.—Aerial input to pre-selector cuircuit, radio frequency amplifier, latest type triode-hexode frequency changer, 2 band-pass I.F.T. coupled I.F. amplifiers, double diode detector, triode L.F. amplifier, separate triode phase-changer capacity coupled to 2 large pentodes in push-pull. Heavy 16-gauge steel chassis. Finest components and workmanship throughout. Harries tetrodes in place of output pentodes if desired.

STANDARD MODEL 12 GNS. As above, but with triode push-pull output, and fewer controls fitted

DEFERRED TERMS on application or through our City Agents
LONDON RADIO SUPPLIES LTD.
11, OAT LANE, E.C.2.
Demonstration: Daily.

All McCarthy receivers supplied complete with valves, knobs, pilot lamp, leads, mains cable and plug. 12 months' guarantee. (Valves 3 months.)

Complete illustrated catalogue, with technical data and circuit diagrams, on receipt of 3d. in stamps, or abridged list of McCarthy chassis types free of charge.

McCARTHY RADIO LTD.
44a, Westbourne Grove, London, W.2
Telephone: Bayswater 3201/2

Letters to the Editor

The Editor does not hold himself responsible for the opinions of his correspondents

Sound Recording

I SHOULD like to comment on Mr. C. H. Campbell Gray's remarks concerning sub-standard sound films, particularly in regard to the amateur worker, and to register agreement with his opinion that "sound on disc" is to be recommended in preference to "sound on film"; but I beg to offer a different prophecy from that of Mr. Campbell Gray's when he states there can be little doubt that sound on film will replace disc recordings as it has done in the case of 35 mm. commercial productions.

Quite apart from the wider frequency range it is possible to get from disc recordings, and only improved within strict limits in the case of a separate sub-standard sound film, the amateur has to consider his pictorial reproduction as well, and it is impossible, both from a theoretical and practical point of view, to produce any kind of a cinematograph picture superior to a sub-standard, reversal processed panchromatic film of the super-sensitive class. One must also give consideration to the modern colour film because of its faithful rendering of chromatic values, and I think it is safe to say it is rapidly succeeding the panchromatic film in the hands of serious amateurs. As the processing of these films is quite outside the scope of the amateur, I suggest SOD is the ideal system of making sub-standard "talkies," and is unlikely to be superseded by the film methods.

It is of some significance to know that our American cousins, who undoubtedly have a lead in amateur cinematography, are now concentrating their efforts in the making of "movies" in colour accompanied by a twin-table representation of sound on disc using commercial "effects" records with home or studio recordings, too, although a microphone commentary is more usual. In this respect may I say how helpful are the recent articles on sound recording and reproduction which have appeared in many issues of *The Wireless World*, and express the hope that further thought will be given to this subject, which is rapidly developing and calling for much pertinent study by all ciné enthusiasts.

In conclusion, we may assume that it is not practical to consider SOF for serious sub-standard cinematography if we are aiming for the highest standards of quality in sound and photography, and I would strongly recommend those whose interests centre around quality to seriously consider SOD in preference to SOF.

Edinburgh. HAMILTON H. TAIT.

Television Sound Adaptor

RECENTLY I decided to make a simple one-valve adaptor in the hope of being able to receive the sound programme from Alexandra Palace; the results seem so good that I am writing to tell you about it, as I feel that, in spite of its amateurishness, the simplicity of the circuit may appeal to others.

As I already have in use a good amplifier consisting of a Marconi MHL4 valve transformer coupled to two PX4s in push-pull, and as there is plenty of heater current and HT supply available from the power-pack, it was only necessary to use a one-valve circuit and connect it to the existing apparatus.

The same adaptor was later connected to the pick-up terminals of a commercial receiver—taking heater current and HT from the receiver—with equally good results.

Tests were made at Ealing and also about 15 miles from Alexandra Palace; in each case the programme was received at comfortable loud-speaker strength on the worst aerial imaginable.

Reaction was smooth, tuning was not critical, it was not necessary to oscillate in order to find the carrier, and no trouble was experienced from hand-capacity effects.

Later variations to the adaptor brought in Canadian and American 10-metre amateurs at comfortable strength on the loud speaker.

As I did not expect much from the adaptor, it was made up in a very crude fashion on a piece of board covered with copper foil; no special precautions were taken other than to keep the leads as short as possible.

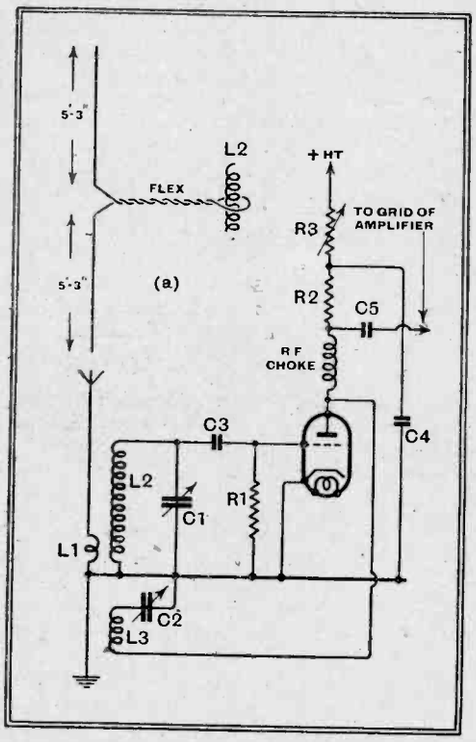

Simple ultra-short-wave tuner-adaptor used by "S.M.A." for reception of the television sound channel. The aerial (a), shown inset, may be used in the manner indicated.

The accompanying diagram shows the circuit of the adaptor. Coils are: L1 3-turn, L2 6-turn, L3 4-turn (all Eddystone). The RF choke is also Eddystone short-wave type (not ultra-short). Values of other components are: C1, about 25 m-mfd. (Eddystone No. 1043); C2, 0.0002 mfd.; C3, 0.0001 mfd.; C4, 4 mfds.; C5, 0.01 mfd. R1, 3 megohms, R2, 50,000 ohms, R3, voltage-dropping resistance to give about 40 volts on anode. In addition, a fixed condenser between valve heater and earth seems desirable.

Coils L2 and L3 are close coupled, but L1 works best when mounted about 2in. from L2. Best results have been obtained with a dipole aerial of the dimensions shown on my diagram. S. M. A.

Ealing.

Tone Control Unit

I HAVE constructed a tone control unit on the lines suggested in the article in your issue dated January 6th.

Before fitting this tone control I had always considered gramophone reproduction a long way behind radio, but I must admit that the realistic reproduction obtainable with correctly adjusted bass and treble boost is a revelation. The effect of the boost controls is to increase both depth and brilliance, while "attack" is very noticeably improved with the increase in treble response.

I venture to draw the attention of other readers to the improvement effected in gramophone reproduction as it is probable that many, as in my own case, have heretofore limited tone control to the customary high note attenuation.

London, S.W.15. E. WHITTOME.

Television Picture Size

NOW that the size of television screens is the subject of discussion it may be of interest to note that to see any picture in correct perspective, it is necessary to view it from a certain point, and that in general that point is uncomfortably close to a small picture. A good example is the photograph on page 629 of *The Wireless World* (December 23). Although it was printed as large as the page would allow, it is necessary to hold it only 3in. from the eye to see it in correct perspective. This is shown by the oval appearance of the lamp globes in the corner when viewed from a normal distance. To see it properly from a distance of six feet one would have to enlarge it to 10ft. × 15ft. It is true that this example embraces an unusually wide angle of view, but it shows that even with an average angle of view one must get so close to a normal television screen that only one viewer can be reasonably near the correct viewpoint.

When this point is properly appreciated and considered in conjunction with the fact (mentioned in "Letters to the Editor" by Messrs. Wallace, Marsland Gander, "Enthusiast," and others) that a picture demands constant attention, Free Grid's old idea, the vision equivalent of headphones, will not appear so wild an imagination after all.

DAVID W. ASHWORTH.

Stonehouse, Glos.

Recording on Disc

ALLOW me to congratulate you and your staff on your excellent policy and selection in producing such interesting articles on the subject of recording on disc.

I am very interested in the subject which I find an interesting hobby. Your journal is the only one taking much notice of this enthralling phase of radio, and one could not hope for better articles on it. I have tried several of the systems described by you, and have found them totally satisfactory.

In my opinion the subject is worthy of

attention by all interested in radio. A high standard of accuracy is needed in this science, and this alone should appeal to many. Then the fact that one has a permanent record of one's achievements is most gratifying. As one has more and more experience of the subject, one realises that this science cannot be totally learnt by reading in books or papers. Its technique must be learned by extensive practice, which is apt to be expensive sometimes, but many useful tips may be obtained by reading your paper. Let us have more, please. K. K. BOURNE.

Manchester.

SIGNAL STRENGTHS

"Cathode Ray's" Fading Experiments

IN giving the results of some experiments on the signal strengths received from broadcasting stations in daylight and darkness (December 30th, 1937), "Cathode Ray" gave warning that the fading-of-signals aspect of the subject might reappear in greater detail at a later date. For reasons that will be revealed in due course, it appears that it is necessary for him to wait for the Spring Equinox in order to complete the experiments to be described. He promises to disclose the results as soon as possible after that date.

New Apparatus Reviewed

EDDYSTONE NEUTRALISING CONDENSER

AN air-spaced neutralising condenser primarily intended for use in amateur transmitting circuits equipped with modern triode valves having low anode to grid capacities is one of the latest additions to the range of short-wave components made by Stratton and Co., Ltd., Eddystone Works, Bromsgrove Street, Birmingham, 5. Mounted on a Frequentite supporting pillar, it consists of two circular plates 1½in. in diameter. One only is movable and this is supported in a split-screw bearing, which, when the required capacity has been found, can be tightened and thus lock the moving plate in position.

Eddystone neutralising condenser for modern short-wave triode valves.

The bearing is free from backlash and so enables critical adjustments of capacity to be effected. The minimum capacity was found to be just under ·2 m-mfds. and its maximum value was 7·5 m-mfds. In the full-capacity position the two plates are separated by $\frac{1}{16}$ in.

It is sturdy and well made and the short-wave experimenter will no doubt find many uses for it apart from its primary application.

The price of this new neutralising condenser, which has the catalogue number 1088, is 6s. 6d.

RAYMART SHORT-WAVE COMPONENTS

THE discriminating amateur who aims to obtain the very best performance with his short-wave receiver is generally prepared to pay a little attention to the mounting and insulation of all high-frequency coils and components.

Good-quality insulating pillars are well worth while using, and Raymart, G5NI (Birmingham), Ltd., 44, Holloway Head, Birmingham, 1, have a most comprehensive range of insulators and pillars to which some new parts have recently been added.

One very useful item, known as a feed-through insulator, is not only a mounting for condensers and coils, but serves also to make connection between components mounted on the chassis to those below. It is made of ceramic material with the lower part spigoted into the upper insulator and the lead-through connecting spindle is thereby completely insulated from the chassis. This is the pear-shaped insulator shown in the illustration and it costs 9d.

A small stand-off insulator measuring 1⅛in. high overall and fitted with a terminal costs 3d., whilst ceramic spreaders for spacing the two wires of an aerial matching section, or a 600-ohm feeder line, are available in 6in. lengths with holes at each end; they cost 4d. each.

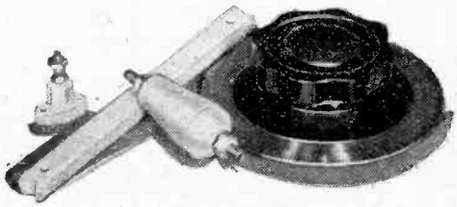

Raymart instrument dial and selection of ceramic insulators.

Another new Raymart product is a 4in. instrument dial which has a large ebonite knob and a 0-100 division scale. The dial is made of brass, is polished and plated and costs 5s.

THE WIRELESS INDUSTRY

A NEW catalogue describing the "Homeland" receiver, recently reviewed in this journal, is prepared on quite unconventional but extremely useful lines. The set is described at length, each detail being discussed and illustrated, while a circuit diagram and pictorial wiring plan are included. Copies are obtainable for 6d. from Anglo-American Radio, Ltd., Albion House, 59, New Oxford Street, London, W.C.1.

Philips equipment for battery charging stations, etc., has been produced in many different types and capacities for the present season; the full range is described in a well-prepared booklet available from Philips Industrial, 145, Charing Cross Road, London, W.C.2.

In order to have better facilities for making and recording voice tests, the Acoustical Manufacturing Company has moved to larger premises at 201-205, Lever Street, City Road, London, E.C.1.

All Guns— one-oh degrees more right!

DEFENCE is today's vital problem—in every arm nothing but the best—nothing but the downright DEPENDABLE is tolerated. Radio plays its big part in a hundred and one ways in the field, the air and on the sea . . . and it must *never fail*. So there you find T.C.C. condensers.

For over 30 years' T.C.C. have specialised—built and designed condensers and nothing but condensers. Little wonder that T.C.C. are acknowledged leaders—that authority says "T.C.C. for SURE."

IT'S T.C.C. WHEN DEPENDABILITY IS THE VITAL FACTOR

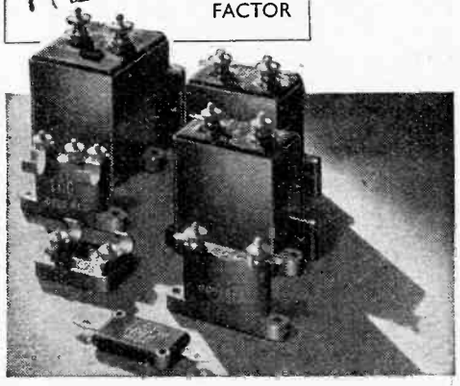

T.C.C.

ALL-BRITISH CONDENSERS

THE TELEGRAPH CONDENSER CO., LTD., WALES FARM ROAD, N. ACTON, W.3.

CA 3847

Recent Inventions

Brief descriptions of the more interesting radio devices and improvements issued as patents will be included in this section.

TELEVISION RECEIVERS

A CATHODE ray receiver is operated on low voltages so that the original image thrown on the fluorescent screen appears quite dim. This image is focused by means of a lens on to a photo-electric surface, and the electrons so liberated are intensified by an electron-optical system, and projected on to a second fluorescent screen, where they produce a bright image.

The use of low operating voltages, both for the CR tube and the time-base circuits, results in a considerable saving in the initial cost of the component parts of a television receiver, as well as in the subsequent running costs.

E. Michaelis. Convention date (Germany), June 15th, 1935. No. 472073.

o o o o

DIRECTION-FINDING

TWO aerials are used, one a directional frame, F, the other, A, being non-directional. The signals received by each are separately amplified at V and V1 and are then passed to a common circuit L, C, from which they are fed to two rectifiers R, R1 shunted across the indicator M.

The pick-up from the frame aerial is applied in push-pull to the two rectifiers, so that, in the case when this aerial is used for "homing," any deviation from the straight course is shown directly on the indicator.

The pick-up from the vertical aerial A is applied at T to the two rectifiers in parallel, so that it imposes no torque on the indicator needle, but removes the 180 deg. ambiguity. A pair of headphones is connected in circuit with the aerial A.

The fact that both signals are separately amplified avoids any error due to possible differences in the amplification factors of the valves used.

F. J. Hooven. Application date, December 14th, 1935. No. 472111.

o o o o

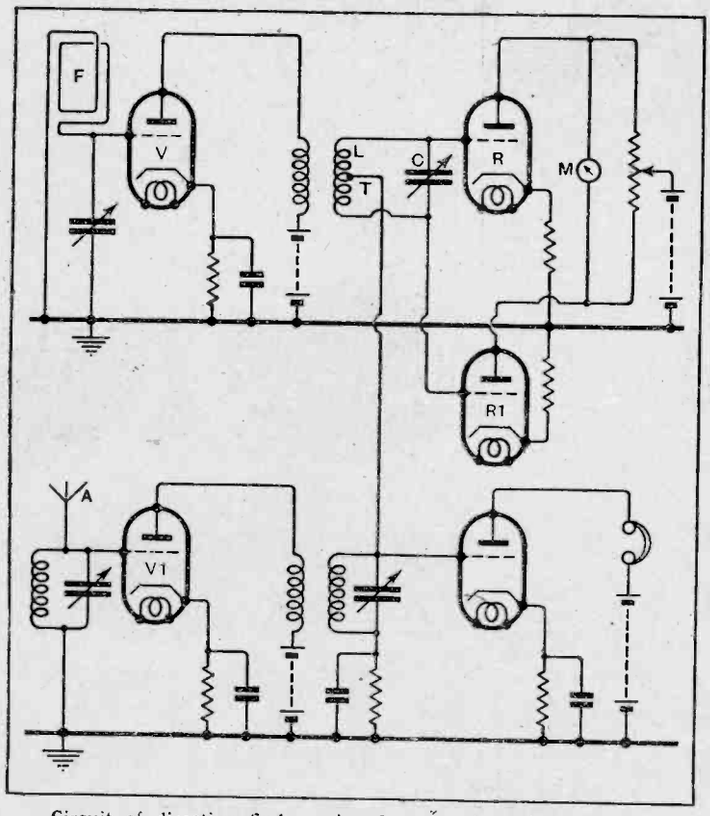

Circuit of direction finder using frame and vertical aerials.

DIELECTRIC GUIDES

RELATES to a type of transmission line for centimetre waves in which the energy travels in the form of displacement currents through a dielectric. The line takes the form of a hollow tube which appears to act as a screen between the inner dielectric and outer space, so that the high-frequency waves are prevented from spreading outwards. The energy flows through the tube almost as though it were water. This type of transmission line is known as a "dielectric guide."

The invention is concerned with various methods of terminating the "guide" so as to obtain proper impedance matching when coupling it, for instance, to another "guide" of different diameter.

Standard Telephones and Cables, Ltd. (communicated by Western Electric, Inc.). Application date, October 2nd, 1936. No. 472725.

o o o o

STEREOSCOPIC TELEVISION

A STEREOSCOPIC effect is secured by making use of the "grating" or parallax effect, in which the right eye is made to view a series of strips which forms one complete picture, whilst the left eye simultaneously sees other strips which form the second picture required to produce an appearance of "relief."

The method of scanning employed both at the transmitting and receiving end is similar to that used in ordinary television, apart from the composite make-up of the screen, so that the system is simpler in operation than those previously proposed for stereoscopic television. Another advantage is that the received pictures can be seen at full picture width, without the use of special glasses.

P. Eisler and F. Pevny. Application date, July 2nd, 1936. No. 472562.

o o o o

CATHODE-RAY TUBES

THE control voltage applied to one pair of the deflecting plates in a cathode-ray tube will sometimes interact with the similar voltages applied to the second pair of deflecting plates, in such a way as to prevent the spot on the screen from following a true path.

According to the invention, the control voltage is passed through a resistance network which is so arranged that a part of the deflecting voltage applied to one pair of plates is diverted on to the second pair of plates in the sense required to offset the undesired reaction between the two.

The Plessey Co., Ltd. and C. E. G. Bailey. Application date, May 21st, 1936. No. 471696.

o o o o

CONTROLLING BRIGHTNESS

ONE of the problems in television is to control the average brightness of the received picture so that it will follow slow changes in the overall illumination of the scene at the transmitting end. Generally speaking, changes of this sort are too slow to affect the amplifying valves directly.

According to the invention advantage is taken of the idle or "flyback" stroke in scanning to build up a biasing voltage, which is proportional to the average illumination of the picture under transmission, and can, therefore, be used to regulate the degree of amplification at the receiving end as required.

Baird Television, Ltd., and V. Jones. Application date, April 2nd, 1936. No. 472980.

o o o o

AMPLIFYING CIRCUITS

IN certain cases, particularly in television, it is desirable to be able to vary the effective amplification of a valve without altering, say, the DC potential on the anode.

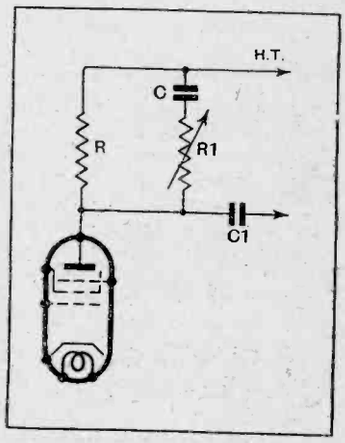

Method of varying amplification of valve without altering anode potential.

The Figure shows one method of doing this. The load resistance R, between the anode of the valve and the HT supply, is paralleled by a variable resistance R1 in series with a condenser C. By varying the value of R1, the total value of the output impedance is altered for high-frequency currents, though there is no change in the DC voltage on the anode.

The output may be taken off across a condenser C1, or the valve may be directly coupled to the Wehnelt cylinder of a cathode-ray tube without affecting the steady potential on that electrode.

Baird Television, Ltd. and L. C. Bentley. Application date, April 21st, 1936. No. 473895.

o o o o

PIEZO-ELECTRIC OSCILLATORS

A QUARTZ, tourmaline, or other crystal is fitted with electrodes of soft metal, such as lead or tin. It is found, rather surprisingly, that such metals give a firmly adhering layer, to which soldered connections can be made by using a soft solder of lower melting-point. The layer should have a thickness of only a few microns in order not to damp the crystal oscillations.

Siemens and Halske Akt. Convention date (Germany), January 27th, 1936. No. 472148.

The British abstracts published here are prepared with the permission of the Controller of H.M. Stationery Office, from specifications obtainable at the Patent Office, 25, Southampton Buildings, London, W.C.2, price 1/- each. A selection of patents issued in U.S.A. is also included.